COMMERCIAL · INDUSTRIAL · RESIDENTIAL

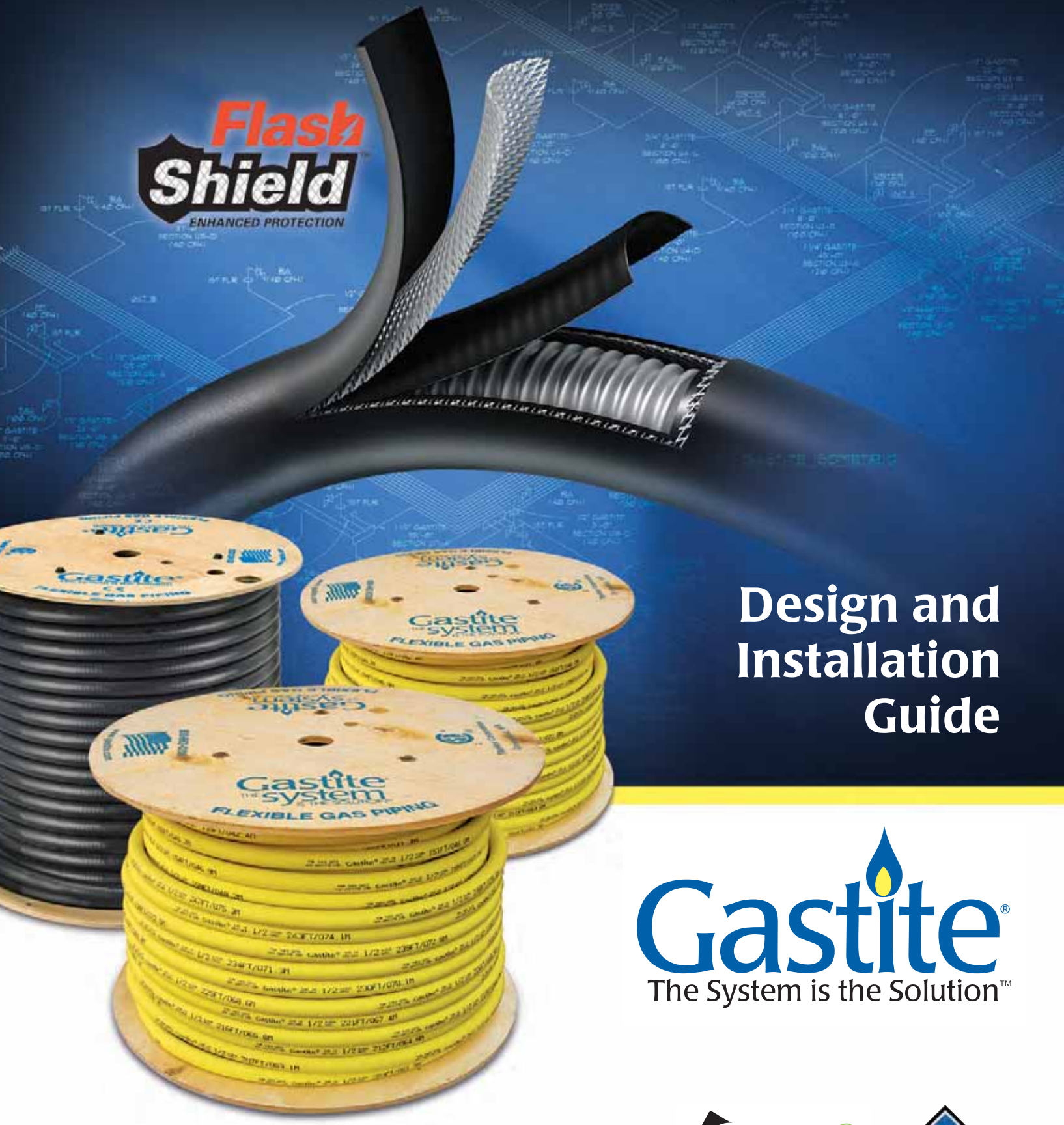

Design and Installation Guide

Gastite®
The System is the Solution™

XR2™ A FITTING SOLUTION™

Gastite THE DIRECT PATH TO SAFETY

October 2011
www.gastite.com

Important Gastite Lightning Safety Warning

LIGHTNING SAFETY WARNING

1 PROPERLY BONDING and grounding the Corrugated Stainless Steel Tubing (CSST) system may reduce the risk of damage and fire from a lightning strike. Lightning is a highly destructive force. Even a nearby lightning strike that does not strike a structure directly can cause systems in the structure to become electrically energized. Differences in potential between systems may cause the charge to arc between systems. Such arcing can cause damage to CSST, including holes. Bonding and grounding should reduce the risk of arcing and related damage. The building owner should confirm that a qualified contractor has properly bonded the CSST gas system to the grounding electrode system of the premises. Refer to Section 4.10 Electrical Bonding/ Grounding in the Gastite Design & Installation Guide for details on bonding & grounding CSST.

2 ALL OWNERS should consult a lightning safety consultant to determine whether installation of a lightning protection system would be required to achieve sufficient protection for all building components from lightning. Factors to consider include whether the area is prone to lightning. Areas with high lightning risk include but are not limited to: Alabama, Arkansas, Florida, Georgia, Illinois, Indiana, Iowa, Kentucky, Louisiana, Maryland, Michigan, Mississippi, Missouri, New Mexico, North Carolina, Ohio, Oklahoma, Pennsylvania, South Carolina, Tennessee, Texas, Virginia and West Virginia. One currently available source of information regarding areas more prone to lighting than others is the flash density map provided by the National Weather Service which can be found at http://www.lightningsafety.noaa.gov/lightning_map.htm. Lightning protection systems are beyond the scope of this manual and installation guidelines, but are covered by National Fire Protection Association, NFPA 780, the Standard for the Installation of Lightning Protection Systems, and other standards.

3 THE OWNER should confirm with the local gas supply utility company that a suitable dielectric union is installed at the service entry of the structure between underground metallic piping and the gas pipes going into the building as required by code.

4 NATIONAL ELECTRIC CODE (NEC), Section 250.104b, states that "bonding all piping and metal air ducts within the premises will provide additional safety". Gastite recommends that all continuous metallic systems be bonded and grounded. The owner should confirm with an electrical or construction specialist that each continuous metallic system in a structure has been bonded and grounded by an electrical professional in accordance with local building codes. This should include, but is not limited to metallic chimney liners, metallic appliance vents, metallic ducting and piping, electrical cables, and structural steel.

5 CARE SHOULD BE TAKEN when installing any type of fuel gas piping (including CSST, iron, or copper) to maintain as much separation as reasonably possible from other electrically conductive systems in the building. Refer to sec. 4.3 Routing, in the Gastite D&I Guide for installation techniques. Consult local building codes as to required separations for CSST from such conductive systems including metallic chimney liners, metallic appliance vents, metallic ducting and piping, and electrical cables. See for instance the Indiana Residential Code, section 675 IAC 14-4.3-155.5 Section G2411.1; gas pipe bonding.

6 LOCAL BUILDING CODES are controlling, however, as a general practice, fuel gas piping, including CSST, should not be installed within a chase or enclosure that houses a metallic chimney liner or appliance vent that protrudes through the roof. In the event such an installation is necessary and conforms to local building codes, the metallic chimney liner or vent must be bonded and grounded by a qualified electrical professional, and a separation distance, as specifically permitted by the applicable local building code between the CSST and the metallic chimney liner or vent, is required. Physical contact between CSST and the metallic chimney liner and/or vent is prohibited. If this physical separation cannot be specifically identified in the local building code and achieved or any local building code requirements cannot be met along the entire length, then rerouting of the CSST is required unless such installation is specifically permitted by the local building inspector.

Gastite
The System is the Solution™

www.gastite.com

©2010, Gastite Division

GENERAL 11/21/08

Gastite
THE DIRECT PATH TO SAFETY™

SECTION 1.0 INTRODUCTION
1.1 General User Warnings 1
1.2 Limitations of the Guidelines 4
1.3 Standards, Listings and Codes 4

SECTION 2.0 SYSTEM DESCRIPTIONS & COMPONENTS
2.1 System Descriptions 5
2.1.1 Gastite® System Description 5
2.1.2 FlashShield™ System Description 6
2.2 Components 7
2.2.1 Corrugated Stainless Steel Tubing 7
2.2.2 Fittings 9
2.2.3 Manifolds 12
2.2.4 Modular Stub System13
2.2.5 Mounting Hardware 14
2.2.6 Pipe Support System 14
2.2.7 Strike Protection 15
2.2.8 Shut-Off Valves and Quick Connects 15
2.2.9 Tubing Cutters and Accessories 16
2.2.10 Bonding Clamps 16
2.2.11 System Identification 16
2.2.12 Regulators 17

SECTION 3.0 SYSTEM CONFIGURATION
3.1 Configuration 20
3.1.1 Introduction 20
3.1.2 System Requirements 20
3.1.3 Reference Data for Proper System Sizing 20
3.1.4 Determining System Layout 21
3.1.5 Allowable Pressure Drop 23
3.1.6 Sizing Methods 23
3.1.7 Modifying an Existing System 24
3.2 Sizing Procedures and Exercises 24
3.2.1 Sizing Examples 24
3.2.2 Example 1 - Series System – 6"WC 25
3.2.3 Example 2 - Parallel System – 6"WC 27
3.2.4 Example 3 - Parallel System – 12-14"WC 29
3.2.5 Example 4 - Dual Pressure System – 2 PSI Trunk and 8"WC Appliance Runs 31
3.2.6 Example 5 - Multiple Manifold System 33
3.2.7 Example 6 - Series System – 7"WC - Hybrid 35
3.2.8 Example 7 - Parallel System – 7"WC – Hybrid 37
3.2.9 Example 8 - Summation Method for Parallel System – 7"WC – Hybrid 39
3.2.10 Example 9 - Summation Method for Series System – 6"WC 41
3.2.11 Example 10 - Commercial Elevated Pressure Series System – 2PSI 44
3.2.12 Example 11 - Commercial Hybrid System – 7"WC 46

SECTION 4.0 INSTALLATION PRACTICES
4.1 General Provisions 49
4.2 Field Fitting Assembly Procedure 50
4.2.1 Gastite Field Fitting 50
4.2.2 FlashShield Field Fitting Assembly 52
4.3 Routing 55
4.3.1 Vertical Runs 55
4.3.2 Horizontal Runs 55
4.3.3 Installation Clearance Holes 55
4.3.4 Concealed Fittings 56
4.3.5 Modifications to Existing Systems 57
4.3.6 Outdoor 57

4.3.7 Fire Rated Constructions 57
4.3.8 Routing Through Masonry Material 57
4.3.9 Installation Within a Chase 57
4.4 Strike Protection 58
4.4.1 Strike Plates 58
4.4.2 Steel Conduit 60
4.5 Meter 60
4.6 Appliance 61
4.6.1 Moveable Appliance 61
4.6.2 Direct Connection – Non-Moveable Appliances 62
4.6.3 Gas Convenience Outlet 62
4.6.4 Special Applications 63
4.7 Manifold 67
4.8 Pressure Regulator 68
4.8.1 Introduction 68
4.8.2 Sizing Instructions 68
4.8.3 Installation 70
4.8.4 Performance 71
4.8.5 Regulator Outlet Pressure Adjustment 71
4.8.6 Over-Pressurization Protection 71
4.9 Underground Installations 72
4.10 Electrical Bonding of Gastite®/FlashShield™ CSST 73

Section 5.0 Inspection, Repair and Replacement
5.1 Minimum Inspection Requirements 74
5.2 Installation Checklist Description 75
5.3 Repair of Damaged CSST 76
5.3.1 Determine Damage 76
5.3.2 Method of Repair 76

Section 6.0 Pressure/Leakage Testing
6.1 General Guidelines for Pressure Testing 77
6.2 Elevated Pressure Systems 77
6.3 Appliance Connection Leakage Check Procedure 78

Section 7.0 Sizing Tables and Pressure Drop Charts
7.1 CSST Capacity Tables - Natural Gas 79
7.2 CSST Capacity Tables - Natural Gas - Elevated Pressure 83
7.3 CSST Capacity Tables - Propane Gas 85
7.4 CSST Capacity Tables - Propane Gas - Elevated Pressure 88
7.5 Gastite® and FlashShield™ CSST Pressure Drop Tables 89
7.6 Iron Pipe Capacity Tables 93
7.7 Iron Pipe Pressure Drop Tables 94
7.8 Reference Data 98

Section 8.0 Definitions 99

Section 9.0 Dimensional and Technical Reference Data 101
9.1 Gastite® Dimensional and Technical Reference Data 101
9.2 FlashShield™ Dimensional and Technical Reference Data 102

Section 10.0 Warranty 105

Frequently Asked Questions 106

Flexible Gas Piping Training Program Test

Gastite Division
1116 Vaughn Parkway / Portland, TN 37148
800.662.0208 / www.gastite.com / gastite@gastite.com

Section 1.0 Introduction

1.1 General User Warnings

Please note that there are specific differences between Gastite and FlashShield™ throughout this Design and Installation Guide. Please take note of these differences as you read through the Guide.

The installation of Gastite® or FlashShield™ Flexible Gas Piping must be performed by a qualified installer who has successfully completed the Gastite®/FlashShield™ training program. The installer must meet all qualifications and requirements to install gas piping as required by the local administrative authority. Improper installation or operation of a Gastite® or FlashShield™ Flexible Gas Piping system may result in fire, explosion or asphyxiation.

This document provides the user with general guidance when designing and installing fuel gas piping using Gastite® or FlashShield™ Flexible Gas Piping. This guideline must be used in conjunction with all applicable building standards and codes. In the event that there is a conflict between this guideline and local code the more stringent requirement will take precedence.

The use of fuel gas can be dangerous. Special attention must be given to the proper design, installation, testing and application of the gas piping system. Sound engineering practices and principles must be exercised, as well as diligent adherence to the proper installation procedures to ensure the safe operation of the piping system. All installed systems must pass customary installation inspections by the local building official having authority prior to being placed into service.

Only the components provided or specified by Gastite as part of the Gastite®/FlashShield™ Flexible fuel piping system are to be used in the installation. Use of components from other flexible gas piping systems other than those specified as part of the Gastite®/FlashShield™ system is prohibited and may result in poor system performance and serious bodily injury or property damage. Where additions, repairs or replacements involve corrugated stainless steel tubing systems from manufacturers other than Gastite Division, the systems should be joined using standard pipe fittings at the interface.

This manual cannot take into account all situations or locations in which Gastite®/FlashShield™ Flexible Gas Piping will be installed. Accordingly, installers should also take into account guidance provided by the National Fuel Gas Code, ANSI Z223.1/NFPA-54, National Standard of Canada, Natural Gas and Propane Installation Code, CSA-B149.1, the Uniform Plumbing Code, the International Code Series, the Federal Manufactured Home Construction and Safety Standards, 24 CFR Part 3280, the Manufactured Housing Construction and Safety Standards, ICC/ANSI 2.0 or the Standard on Manufactured Housing, NFPA 501. Gastite Division shall have no responsibility for any misinterpretation of the information contained in this guide or any improper installation or repair work or other deviation from procedures recommended in this manual, whether pursuant to local building codes or engineering specifications or otherwise.

Gastite Division makes no representation or warranty, and nothing contained in this manual shall imply that this manual contains the best or the only approved method for installing corrugated stainless steel piping systems or that this manual's contents are appropriate for all circumstances. In the event that there is a conflict between this guideline and local code the more stringent requirement will take precedence. Performance of accessory devices, such as pressure regulators and shut off valves should be reconfirmed by contacting the accessory device manufacturer and receiving the latest technical data on sizing, installation and performance.

Continued...

1.1 General User Warnings (continued)

A Gastite®/FlashShield™ Flexible Gas Piping system offers advantages over other gas delivery systems because of its wall dimensions and corrugated design. In contrast to rigid steel pipe, Gastite®/FlashShield™ does not require intermediate joints in most installations because the tubing is capable of being installed in one continuous run, reducing not only the total number of joints, but also the potential for leaks at joints. Gastite®/FlashShield™'s flexibility also affords more installation options because an installer can avoid existing obstacles, and it eliminates the repetitive measuring, cutting, threading and joint assembly that are common with installation of rigid steel piping systems. Gastite®/FlashShield™'s flexibility offers even further safety advantages in geographic areas that are prone to seismic activity because the tubing is able to move as the ground or the structure shifts.

While Gastite®/FlashShield™ provides significant advantages over more rigid gas delivery systems, its flexible design may make it more likely than steel pipe to be punctured by a nail or other sharp objects, or damaged by other extraordinary forces such as lightning strike, depending on the circumstances.

Properly bonding and grounding the Corrugated Stainless Steel Tubing (CSST) system may reduce the risk of damage and fire from a lightning strike. Lightning is a highly destructive force. Even a nearby lightning strike that does not strike a structure directly can cause systems in the structure to become electrically energized. Differences in potential between systems may cause the charge to arc between systems. Such arcing can cause damage to CSST, including holes. Bonding and grounding should reduce the risk of arcing and related damage. The building owner should confirm that a qualified contractor has properly bonded the CSST gas system to the grounding electrode system of the premises. Refer to Section 4.10 Electrical Bonding/Grounding in the Gastite®/FlashShield™ Design & Installation Guide for details on bonding & grounding CSST.

All owners should consult a lightning safety consultant to determine whether installation of a lightning protection system would be required to achieve sufficient protection for all building components from lightning. Factors to consider include whether the area is prone to lightning. Areas with high lightning risk include but are not limited to: Arkansas, Florida, Georgia, Illinois, Indiana, Iowa, Kentucky, Louisiana, Maryland, Michigan, Mississippi, Missouri, New Mexico, North Carolina, Ohio, Oklahoma, Pennsylvania, South Carolina, Tennessee, Texas and West Virginia. One currently available source of information regarding areas more prone to lighting than others is the flash density map provided by the National Weather Service which can be found at http://www.lightningsafety.noaa.gov/lightning_map.htm. Lightning protection systems are beyond the scope of this manual and installation guidelines, but are covered by National Fire Protection Association, NFPA 780, the Standard for the Installation of Lightning Protection Systems, and other standards.
The owner should confirm with the local gas supply utility company that a suitable dielectric union is installed at the service entry of the structure between underground metallic piping and the gas pipes going into the building as required by code.

Section 250.104b of the National Electric Code (NEC) states that "bonding all piping and metal air ducts within the premises will provide additional safety". Gastite recommends that all continuous metallic systems be bonded and grounded. The owner should confirm with an electrical or construction specialist that each continuous metallic system in a structure has been bonded and grounded by an electrical professional in accordance with local building codes. This should include, but is not limited to: metallic chimney liners, metallic appliance vents, metallic ducting and piping, electrical cables, and structural steel.

Gastite Division
1116 Vaughn Parkway / Portland, TN 37148
800.662.0208 / www.gastite.com / gastite@gastite.com

1.1 General User Warnings (continued)

Care should be taken when installing any type of fuel gas piping (including CSST, iron, or copper) to maintain as much separation as reasonably possible from other electrically conductive systems in the building. Refer to section 4.3 Routing, in the Gastite®/FlashShield™ D&I Guide for installation techniques. Consult local building codes as to required separations for CSST from such conductive systems including metallic chimney liners, metallic appliance vents, metallic ducting and piping, and electrical cables. See for instance the Indiana Residential Code, section 675 IAC 14-4.3-155.5 Section G2411.1; gas pipe bonding.

Local building codes are controlling, however, as a general practice, fuel gas piping, including CSST, should not be installed within a chase or enclosure that houses a metallic chimney liner or appliance vent that protrudes through the roof. In the event such an installation is necessary and conforms to local building codes, the metallic chimney liner or vent must be bonded and grounded by a qualified electrical professional, and a separation distance, as specifically permitted by the applicable local building code between the CSST and the metallic chimney liner or vent, is required. Physical contact between CSST and the metallic chimney liner and/or vent is prohibited. If this physical separation cannot be specifically identified in the local building code and achieved or any local building code requirements cannot be met along the entire length, then rerouting of the CSST is required unless such installation is specifically permitted by the local building inspector.

NOTE: Leak test solutions may cause corrosion in some types of material in the gas piping system. Be sure to water rinse after the test and thoroughly dry all contacted material.

1.2 Limitations of the Guidelines

This document is intended to aid the professional gas installer in the design, installation and testing of fuel gas piping systems using corrugated stainless steel tubing (CSST) for residential housing, commercial and industrial buildings. It would be impossible for this guideline to anticipate and cover every possible variation in building configurations, construction styles, appliance loads and code restrictions. Therefore, there will be applications that will not be covered by this guideline. For applications that go beyond the scope of this guideline, the installer should exercise sound engineering principles and practices and/or contact Gastite for engineering assistance.

The techniques outlined within this guideline are recommended practice for generic applications. These practices must be reviewed for compliance with all applicable local fuel gas and building codes. In the event that there is a conflict between this guide and local code, the more stringent requirement will take precedence.

Using components from other flexible gas piping systems other than those specified as part of the Gastite®/FlashShield™ system is prohibited and may result in poor system performance and serious bodily injury or property damage. Additional information pertaining to gas piping systems is available from your local gas utility or propane supplier. Please visit the Gastite Web site at www.gastite.com for additional updates and technical bulletins.

1.3 Standards, Listings and Codes

The Gastite®/FlashShield™ corrugated stainless steel tubing system complies with the following standards, listings and model codes.

Standards

ANSI LC1-2005, CSA 6.26-2006, "Fuel Gas Piping Systems Using Corrugated Stainless Steel Tubing (CSST)."

Listings

- CSA – CSA International - Certificate No. 1009875
- ICC – International Code Council – Evaluation Report Number PM6 1019 + PMG 1066
- IAPMO – International Association of Plumbing and Mechanical Officials – File Number 3250

Code Compliance

- BOCA – National Mechanical Code
- CABO 1 & 2 Family Dwelling
- ICC – International Code Series
- National Standard of Canada – Nationals Gas & Propane Installation Code, CAN/CGA-B149.1
- NFPA – National Fuel Gas Code (NFPA 54)
- SBCCI – Standard Gas Code
- UMC – Uniform Mechanical Code (ICBO)
- UMC – Uniform Mechanical Code (IAPMO) "Alternate Materials & Methods"
- UMC – Uniform Mechanical Code (IAPMO) – 2003 and Later
- UPC – Uniform Plumbing Code (IAPMO) "Alternate Materials & Methods"
- UPC – Uniform Plumbing Code (IAPMO) – 2003 and Later

While every effort has been made to prepare this document in accordance with all regional model codes in effect at its printing, Gastite cannot guarantee that the local administrative authority will accept the most recent version of these codes. It is the ultimate responsibility of the installer to determine suitability and acceptance of any building component including gas piping. Gastite assumes no responsibility for labor or material for installations made without prior determination of local code authority acceptance.

Gastite Division
1116 Vaughn Parkway / Portland, TN 37148
800.662.0208 / www.gastite.com / gastite@gastite.com

Section 2.0 System Descriptions & Components

2.1 System Descriptions

2.1.1 Gastite® System Description

a) The Gastite® Flexible Gas Piping System has been tested in accordance with the American National Standard for Fuel Gas Systems Using Corrugated Stainless Steel Tubing, ANSI LC1-2005. This standard lists performance requirements for certification of CSST systems for use with all recognized fuel gases, including Natural Gas and Propane.

- System uses corrugated stainless steel tubing (CSST) made of type 304 alloy, ASTM A240.
- An annealing process tempers the steel giving it added flexibility and ease of bending.
- Gastite® Flexible Gas Piping is suitable for use with elevated pressure systems. The ANSI LC1 standard rates CSST for use at pressures up to 5PSI.

b) The tubing is connected using special mechanical brass fittings designed specifically for Gastite® CSST.

- Corrosion resistant brass fittings incorporate the Gastite® patented "Jacket Lock" feature. The polyethylene jacket is clamped by the fitting thereby minimizing the risk of contact with corrosives and foreign material.
- Gastite® fittings have standard NPT threads and may be used in combination with all approved fuel gas piping materials with the pipe threads as the interface. System components such as manifolds, tees and stub-outs may be fabricated from other approved materials to be used with Gastite® flexible gas piping.
- The self-flaring fitting creates a one step, reusable, metal on metal seal.

c) The polyethylene jacket is extruded over the stainless steel tubing creating a flexible, protective covering. The jacket is an added feature of the tubing and does not affect the flaring/sealing process.

- The jacket is engineered with thermal and UV resistant material making it suitable for outdoor use.
- The polyethylene is fused with flame retardant material making it ASTM E84 25/50 Compliant. As a fire rated material, it meets the requirements for flame spread and smoke density. This allows the jacket to remain intact throughout a building, thus maximizing the protection provided by the jacket.
- The polyethylene extrusion process creates a smooth outside surface; this surface greatly aids in pulling the tube through tight building spaces.

d) The corrugated stainless steel tubing system has a number of essential hardware and design differences from conventional gas piping using rigid steel pipe and copper tubing. These differences are described as follows:

- In many applications, the tubing is sized for individual gas appliance loads and is, therefore, usually small in diameter. The tubing may also be installed in a parallel fashion from a central distribution manifold rather than a series layout commonly used for rigid pipe systems.
- Corrugated Stainless Steel Tubing is pulled through the structure similar in fashion to electrical wiring and therefore requires different handling and installation techniques than rigid pipe.
- Rigid termination of the tube ends is required.
- Flexibility and strike plates protect the CSST allowing it to be run in concealed spaces.

2.1.2 FlashShield™ System Description

a) The FlashShield™ Flexible Gas Piping System has been tested in accordance with the American National Standard for Fuel Gas Systems Using Corrugated Stainless Steel Tubing, ANSI LC1-2005. This standard lists performance require ments for certification of CSST systems for use with all recognized fuel gases, including Natural Gas and Propane.

- System uses corrugated stainless steel tubing (CSST) made of type 304 alloy, ASTM A240.
- An annealing process tempers the steel giving it added flexibility and ease of bending.
- FlashShield™ Flexible Gas Piping is suitable for use with elevated pressure systems. The ANSI LC1 standard rates CSST for use at pressures up to 5PSI.

b) The tubing is connected using special mechanical brass fittings designed specifically for FlashShield CSST.

- Corrosion resistant brass fittings incorporate the FlashShield™ patented "Jacket Lock" feature. The jacket is clamped by the fitting thereby minimizing the risk of contact with corrosives and foreign material.
- FlashShield™ fittings have standard NPT threads and may be used in combination with all approved fuel gas piping materials with the pipe threads as the interface. System components such as manifolds, tees and stubouts may be fabricated from other approved materials to be used with FlashShield™ flexible gas piping.
- The self-flaring fitting creates a one step, reusable, metal on metal seal.

c) The jacket is extruded over the stainless steel tubing creating a flexible, protective covering. The jacket is an added feature of the tubing and does not affect the flaring/sealing process.

- The jacket is engineered with thermal and UV resistant material making it suitable for outdoor use.
- The extrusion process creates a smooth outside surface; this surface greatly aids in pulling the tube through tight building spaces.
- Jacket fused with Flame Retardant marking it ASTM E84 25/50 compliant.

d) The corrugated stainless steel tubing system has a number of essential hardware and design differences from conventional gas piping using rigid steel pipe and copper tubing. These differences are described as follows:

- In many applications, the tubing is sized for individual gas appliance loads and is, therefore, usually small in diameter. The tubing may also be installed in a parallel fashion from a central distribution manifold rather than a series layout commonly used for rigid pipe systems.
- Corrugated Stainless Steel Tubing is pulled through the structure similar in fashion to electrical wiring and therefore requires different handling and installation techniques than rigid pipe.
- Rigid termination of the tube ends is required.
- Flexibility and strike plates protect the CSST allowing it to be run in concealed spaces.

Gastite Division
1116 Vaughn Parkway / Portland, TN 37148
800.662.0208 / www.gastite.com / gastite@gastite.com

2.2 Components

2.2.1 Corrugated Stainless Steel Tubing

CSST

GASTITE CORRUGATED STAINLESS STEEL TUBING (CSST)

Part No.	Description	Pkg. Qty.
S93-6A4-250	**3/8" Corrugated Stainless Steel Tubing**	**250 Ft/Coil**
S93-6A4-50 *		50 Ft/Box
S93-6A4-125		125 Ft/Coil
S93-6A4-500		500 Ft/Coil
S93-6A4-1000		1000 Ft/Coil
S93-8A4-250	**1/2" Corrugated Stainless Steel Tubing**	**250 Ft/Coil**
S93-8A4-50 *		50 Ft/Box
S93-8A4-125		125 Ft/Coil
S93-8A4-500		500 Ft/Coil
S93-8A4-1000		1000 Ft/Coil
S93-8A4-1500		1500 Ft/Coil
S93-11B4-250	**3/4" Corrugated Stainless Steel Tubing**	**250 Ft/Coil**
S93-11B4-50 *		50 Ft/Box
S93-11B4-125		125 Ft/Coil
S93-11B4-500		500 Ft/Coil
S93-11B4-1000		1000 Ft/Coil
S93-16A4-150	**1" Corrugated Stainless Steel Tubing**	**150 Ft/Coil**
S93-16A4-50 *		50 Ft/Coil
S93-16A4-75		75 Ft/Coil
S93-16A4-300		300 Ft/Coil
S93-16A4-500		500 Ft/Coil
S93-20A4-150	**1-1/4" Corrugated Stainless Steel Tubing**	**150 Ft/Coil**
S93-20A4-50 *		50 Ft/Coil
S93-20A4-75		75 Ft/Coil
S93-20A4-300		300 Ft/Coil
S93-24A4-150	**1-1/2" Corrugated Stainless Steel Tubing**	**150 Ft/Coil**
S93-24A4-50		50 Ft/Coil
S93-24A4-75		75 Ft/Coil
S93-24A4-300		300 Ft/Coil
S93-32A4-150	**2" Corrugated Stainless Steel Tubing**	**150 Ft/Coil**
S93-32A4-50		50 Ft/Coil
S93-32A4-75		75 Ft/Coil
S93-32A4-300		300 Ft/Coil

* Packaged in box.

Please contact Gastite Customer Service for custom lengths.

Application

- CSST flexible gas piping supplies natural gas or liquefied petroleum gas to appliances.

Material / Specifications

- Tubing: ASTM A240 Type 304, Stainless Steel.
- Jacket: UV resistant Polyethylene complying with requirements of ASTM E84 Index for Flame and Smoke.

Features and Benefits

- Flexibility and durability allows for simple routing through complex building structures and designs.
- Pre-marked by the foot for easy measuring and installation.
- Minimum tubing wall thickness of .010 on all sizes is more robust than other brands of CSST.
- Annealed 304 stainless steel makes tubing more flexible than brands not heat-treated.

2.2.1 Corrugated Stainless Steel Tubing

CSST

New!

FLASHSHIELD™ CORRUGATED STAINLESS STEEL TUBING (CSST)

Part No.	Description	Pkg. Qty.
FS-8-250	**1/2" FlashShield™ Corrugated Stainless Steel Tubing**	**250 Ft/Coil**
FS-8-50 *		50 Ft/Box
FS-8-125		125 Ft/Coil
FS-8-500		500 Ft/Coil
FS-8-1000		1000 Ft/Coil
FS-8-1500		1500 Ft/Coil
FS-11-250	**3/4" FlashShield™ Corrugated Stainless Steel Tubing**	**250 Ft/Coil**
FS-11-50 *		50 Ft/Box
FS-11-125		125 Ft/Coil
FS-11-500		500 Ft/Coil
FS-11-1000		1000 Ft/Coil
FS-16-150	**1" FlashShield™ Corrugated Stainless Steel Tubing**	**150 Ft/Coil**
FS-16-50 *		50 Ft/Coil
FS-16-75		75 Ft/Coil
FS-16-300		300 Ft/Coil
FS-16-500		500 Ft/Coil
FS-20-150	**1-1/4" FlashShield™ Corrugated Stainless Steel Tubing**	**150 Ft/Coil**
FS-20-50		50 Ft/Coil
FS-20-75		75 Ft/Coil
FS-20-300		300 Ft/Coil

* Packaged in box.

Please contact Gastite Customer Service for custom lengths.

Application

- CSST flexible gas piping supplies natural gas or liquefied petroleum gas to appliances.

Material / Specifications

- Tubing: ASTM A240 Type 304 Stainless Steel.
- Jacket: UV resistant.
- Jacket complies with requirements of ASTM E84 25/50 index for flame and smoke.

Features and Benefits

- Metal mesh layer dissipates electricity.
- Two jackets of semi-conductive polymer.
- No manufacturer required bonding.
- No special routing requirements or restrictions.
- Annealed 304 stainless steel makes tubing more flexible than brands not heat-treated.
- Minimum tubing wall thickness of .010 on all sizes is more robust than other brands of CSST.
- Flexibility means quick and easy installations. FlashShield™ installs 30-70% faster than traditional piping methods.
- Pre-marked by the foot, there's no measuring, rigid pipe cutting or threading. This means less waste and fewer fittings.
- 75% fewer fittings in the average installation means a safer system, less leak potential and reduced callbacks.
- FlashShield™ CSST is lightweight – 250 feet of 1/2" CSST weighs approximately 50 pounds and can be easily transported and handled on the job.
- Custom lengths of tubing and job-specific accessories for those large and multi-family projects can be easily obtained by a simple telephone call.

Gastite Division
1116 Vaughn Parkway / Portland, TN 37148
800.662.0208 / www.gastite.com / gastite@gastite.com

2.2.2 Fittings

Straight Fitting

Straight Female Fitting

Reducing Fitting

Tee Fitting

Coupling

XR2 SERIES STRAIGHT FITTING (ADAPTER/NUT/BUSHING)

Part No.	Description	Pkg. Qty.
XR2FTG-6-24	3/8" Straight Fitting – 1/2" NPT	24/Box
XR2FTG-8-24	1/2" Straight Fitting – 1/2" NPT	24/Box
XR2FTG-11-24	3/4" Straight Fitting – 3/4" NPT	24/Box
XR2FTG-16-12	1" Straight Fitting – 1" NPT	12/Box
XR2FTG-20-6	1-1/4" Straight Fitting – 1-1/4" NPT	6/Box
XR2FTG-24-4	1-1/2" Straight Fitting – 1-1/2" NPT	4/Box
XR2FTG-32-4	2" Straight Fitting – 2" NPT	4/Box

XR2 SERIES STRAIGHT FEMALE FITTING (ADAPTER/NUT/BUSHING)

Part No.	Description	Pkg. Qty.
XR2FTGFM-8-24	1/2" Straight Fitting – 1/2" Female NPT	24/Box
XR2FTGFM-11-8-24	3/4" Straight Fitting – 1/2" Female NPT	24/Box
XR2FTGFM-11-24	3/4" Straight Fitting – 3/4" Female NPT	24/Box

XR2 SERIES REDUCING FITTING (ADAPTER/NUT/BUSHING)

Part No.	Description	Pkg. Qty.
XR2REDFTG-11-08-24	3/4" Straight Reducing Fitting – 1/2" NPT	24/Box
XR2REDFTG-16-12-12	1" Straight Reducing Fitting – 3/4" NPT	12/Box

XR2 SERIES TEE FITTING

Part No.	Description	Pkg. Qty.
XR2T-8-12	1/2" Run x 1/2" Run x 1/2" Tee – Tee Fitting	12/Box
XR2T-11-12	3/4" Run x 3/4" Run x 3/4" Tee – Tee Fitting	12/Box
XR2T-16-6	1" Run x 1" Run x 1" Tee – Tee Fitting	6/Box
XR2T-11-8-8-6	3/4" Run x 1/2" Run x 1/2" Tee – Tee Fitting	6/Box
XR2T-11-11-8-6	3/4" Run x 3/4" Run x 1/2" Tee – Tee Fitting	6/Box
XR2T-16-11-8-6	1" Run x 3/4" Run x 1/2" Tee – Tee Fitting	6/Box
XR2T-16-11-11-6	1" Run x 3/4" Run x 3/4" Tee – Tee Fitting	6/Box
XR2T-16-16-11-6	1" Run x 1" Run x 3/4" Tee – Tee Fitting	6/Box
XR2T-8-8-8N-12	1/2" Run x 1/2" Run x 1/2" NPT Tee - Tee Fitting	12/Box
XR2T-11-8-8N-12	3/4" Run x 1/2" Run x 1/2" NPT Tee - Tee Fitting	12/Box
XR2T-11-11-12N-12	3/4" Run x 3/4" Run x 3/4" NPT Tee - Tee Fitting	12/Box

XR2 SERIES COUPLING FITTINGS

Part No.	Description	Pkg. Qty.
XR2CPL-6-12	3/8" Coupling	12/Box
XR2CPL-8-12	1/2" Coupling	12/Box
XR2CPL-11-12	3/4" Coupling	12/Box
XR2CPL-16-6	1" Coupling	6/Box
XR2CPL-20-6	1-1/4" Coupling	6/Box
XR2CPL-24-4	1-1/2" Coupling	4/Box
XR2CPL-32-4	2" Coupling	4/Box

Note: Fitting Components available. Please contact Customer Service for pricing.

Application

- Straight Fittings connect the flexible gas tubing to gas supply, distribution manifolds or gas appliances.
- Tee Fittings create a branch line on tubing runs.
- Couplings allow for the splicing and additions to the flexible gas tubing.

Material / Specifications

- Fitting adapter, bushings and nut – Brass.

Features and Benefits

- Tool-less flare design; no special tools are required.
- Metal-to-metal seal, with no split rings, O-rings or gaskets.
- Self-guiding assembly to ensure a perfectly even flare.
- Exclusive, patented Jacket-Lock fitting eliminates exposed stainless steel beyond the nut.
- All components are fully reuseable.

2.2.2 Fittings

Straight Fitting

Straight Female Fitting

Reducing Fitting

Coupling

FLASHSHIELD™ STRAIGHT FITTING (ADAPTER/NUT/BUSHING)

Part No.	Description	Pkg. Qty.
FSFTG-8-24	1/2" FlashShield™ Straight Fitting - 1/2" NPT	24/Box
FSFTG-11-24	3/4" FlashShield™ Straight Fitting – 3/4" NPT	24/Box
FSFTG-16-12	1" FlashShield™ Straight Fitting – 1" NPT	12/Box
FSFTG-20-6	1-1/4" FlashShield™ Straight Fitting – 1-1/4" NPT	6/Box

FLASHSHIELD™ STRAIGHT FEMALE FITTING (ADAPTER/NUT/BUSHING)

Part No.	Description	Pkg. Qty.
FSFTGFM-8-24	1/2" FlashShield™ Straight Fitting - 1/2" Female NPT	24/Box
FSFTGFM-11-8-24	3/4" FlashShield™ Straight Fitting - 1/2" Female NPT	24/Box
FSFTGFM-11-24	3/4" FlashShield™ Straight Fitting - 3/4" Female NPT	24/Box

FLASHSHIELD™ REDUCING FITTING (ADAPTER/NUT/BUSHING)

Part No.	Description	Pkg. Qty.
FSREDFTG-11-08-24	3/4" FlashShield™ Straight Reducing Fitting - 1/2" NPT	24/Box
FSREDFTG-16-12-12	1" FlashShield™ Straight Reducing Fitting - 3/4" NPT	12/Box

FLASHSHIELD™ COUPLING FITTINGS

Part No.	Description	Pkg. Qty.
FSCPL-8-12	1/2" FlashShield™ Coupling	12/Box
FSCPL-11-12	3/4" FlashShield™ Coupling	12/Box
FSCPL-16-6	1" FlashShield™ Coupling	6/Box
FSCPL-20-6	1-1/4" FlashShield™ Coupling	6/Box

Note: Fitting Components available. Please contact Customer Service for pricing.

APPLICATION
- Straight Fittings connect the flexible gas tubing to gas supply, distribution manifolds or gas appliances.
- Tee Fittings create a branch line on tubing runs.
- Couplings allow for the splicing and additions to the flexible gas tubing.

MATERIAL / SPECIFICATIONS
- Fitting adapter, bushings and nut – Brass.

FEATURES AND BENEFITS
- Jacket bite for continuous conductivity.
- Tool-less flare design; no special tools are required.
- Metal-to-metal seal, with no split rings, O-rings or gaskets.
- Self-guiding assembly to ensure a perfectly even flare.
- Exclusive, patented Jacket-Lock fitting eliminates exposed stainless steel beyond the nut.
- All components are fully reuseable.

Gastite Division
1116 Vaughn Parkway / Portland, TN 37148
800.662.0208 / www.gastite.com / gastite@gastite.com

2.2.2 Fittings

Termination Fitting
With Square Flange

XR2 SERIES TERMINATION FITTING (FLANGE/ADAPTER/NUT/BUSHING)

Part No.	Description	Pkg. Qty.
XR2TRM-6-12	3/8" Term. Fitting-Square Flange – 1/2" NPT	12/Box
XR2TRM-8-12	1/2" Term. Fitting-Square Flange – 1/2" NPT	12/Box
XR2TRM-11-12	3/4" Term. Fitting-Square Flange – 3/4" NPT	12/Box
XR2TRM-16-6	1" Term. Fitting-Square Flange – 1" NPT	6/Box
XR2TRM-20-6	1-1/4" Term. Fitting-Square Flange – 1-1/4" NPT	6/Box
XR2TRM-24-4	1-1/2" Term. Fitting-Square Flange – 1-1/2" NPT	4/Box
XR2TRM-32-4	2" Term. Fitting-Square Flange – 2" NPT	4/Box

Termination Fitting
No Flange

XR2 SERIES TERMINATION FITTING WITH NO FLANGE (ADAPTER/NUT/BUSHING)

Part No.	Description	Pkg. Qty.
XR2TRM-6-NF-12	3/8” Term. Fitting – 1/2” NPT with no Flange	12/Box
XR2TRM-8-NF-12	1/2” Term. Fitting – 1/2” NPT with no Flange	12/Box
XR2TRM-11-NF-12	3/4” Term. Fitting – 3/4” NPT with no Flange	12/Box
XR2TRM-16-NF-6	1” Term. Fitting – 1” NPT with no Flange	6/Box
XR2TRM-20-NF-6	1-1/4” Term. Fitting – 1-1/4” NPT with no Flange	6/Box
XR2TRM-24-NF-4	1-1/2” Term. Fitting – 1-1/2” NPT with no Flange	4/Box
XR2TRM-32-NF-4	2” Term. Fitting – 2” NPT with no Flange	4/Box

Term Bracket Fitting

XR2 SERIES TERMINATION BRACKET FITTING (BRACKET/ADAPTER/NUT/BUSHING)

Part No.	Description	Pkg. Qty.
XR2TRMBKT-8-12	1/2" Term. Bracket Fitting – 1/2" NPT	12/Box
XR2TRMBKT-11-12	3/4" Term. Bracket Fitting – 3/4" NPT	12/Box
XR2TRMBKT-16-6	1” Term. Bracket Fitting – 1” NPT	6/Box
XR2TRMBKT-20-6	1-1/4” Term Bracket Fitting – 1-1/4” NPT	6/Box
XR2TRMBKT-24-4	1-1/2” Term. Bracket Fitting – 1-1/2” NPT	4/Box
XR2TRMBKT-32-4	2” Term. Bracket Fitting – 2” NPT	4/Box

Application

- Termination Fittings create a fixed point "stub-out" on a wall or floor surface.
- Termination Bracket Fittings provide a secure attachment point for key-valves and as an alternate termination point.

Material / Specifications

- Fitting adapter, bushings and nut - Brass.
- Square Flange – Steel with zinc coating.

Features and Benefits

- Tool-less flare design; no special tools are required.
- Metal-to-metal seal, with no split rings, O-rings or gaskets.
- Self-guiding assembly to ensure a perfectly even flare.
- Exclusive, patented Jacket-Lock fitting eliminates exposed stainless steel beyond the nut.
- All components are fully reuseable.

2.2.2 Fittings

New!

Termination Fitting With Square Flange

FLASHSHIELD™ TERMINATION FITTING (FLANGE/ADAPTER/NUT/BUSHING)

Part No.	Description	Pkg. Qty.
FSTRM-8-12	1/2" FlashShield™ Term. Fitting - 1/2" NPT	12/Box
FSTRM-11-12	3/4" FlashShield™ Term. Fitting - 3/4" NPT	12/Box
FSTRM-16-6	1" FlashShield™ Term. Fitting - 1" NPT	6/Box
FSTRM-20-6	1-1/4" FlashShield™ Term. Fitting - 1-1/4" NPT	6/Box

FLASHSHIELD™ TERMINATION FITTING WITH BRONZE FLANGE (FLANGE/ADAPTER/NUT/BUSHING)

Part No.	Description	Pkg. Qty.
FSTRM-8-12CB	1/2" FlashShield™ Term. Fitting w/ Bronze Flange - 1/2" NPT	12/Box
FSTRM-11-12CB	3/4" FlashShield™ Term. Fitting w/ Bronze Flange - 3/4" NPT	12/Box
FSTRM-16-6CB	1" FlashShield™ Term. Fitting w/ Bronze Flange - 1" NPT	6/Box
FSTRM-20-6CB	1-1/4" FlashShield™ Term. Fitting w/ Bronze Flange - 1-1/4" NPT	6/Box

Termination Fitting No Flange

FLASHSHIELD™ TERMINATION FITTING WITH NO FLANGE (ADAPTER/NUT/BUSHING)

Part No.	Description	Pkg. Qty.
FSTRM-8-NF-12	1/2" FlashShield™ Term. Fitting - 1/2" NPT (no flange)	12/Box
FSTRM-11-NF-12	3/4" FlashShield™ Term. Fitting - 3/4" NPT (no flange)	12/Box
FSTRM-16-NF-6	1" FlashShield™ Term. Fitting - 1" NPT (no flange)	6/Box
FSTRM-20-NF-6	1-1/4" FlashShield™ Term. Fitting - 1-1/4" NPT (no flange)	6/Box

Term Bracket Fitting

FLASHSHIELD™ TERMINATION BRACKET FITTING (BRACKET/ADAPTER/NUT/BUSHING)

Part No.	Description	Pkg. Qty.
FSTRMBKT-8-12	1/2" FlashShield™ Term. Bracket Fitting - 1/2" NPT	12/Box
FSTRMBKT-11-12	3/4" FlashShield™ Term. Bracket Fitting - 3/4" NPT	12/Box
FSTRMBKT-16-6	1" FlashShield™ Term. Bracket Fitting - 1" NPT	6/Box
FSTRMBKT-20-6	1-1/4" FlashShield™ Term. Bracket Fitting - 1-1/4" NPT	6/Box

APPLICATION

- Termination Fittings create a fixed point "stub-out" on a wall or floor surface.
- Termination Bracket Fittings provide a secure attachment point for key-valves and as an alternate termination point.

MATERIAL / SPECIFICATIONS

- Fitting adapter, bushings and nut - Brass.
- Square Flange – Steel with zinc coating.

FEATURES AND BENEFITS

- Jacket bite for continuous conductivity.
- Tool-less flare design; no special tools are required.
- Metal-to-metal seal, with no split rings, O-rings or gaskets.
- Self-guiding assembly to ensure a perfectly even flare.
- Exclusive, patented Jacket-Lock fitting eliminates exposed stainless steel beyond the nut.
- All components are fully reuseable.

2.2.3 Manifolds

Cast Manifolds

MULTI-PORT MANIFOLDS

Part No.	Description	Pkg. Qty.
3-PORTMAN	Cast 3 port – 3/4"F x 3 @ 1/2"F x 1/2"F	1 Ea.
3-PORTMAN-1	Cast 3 port – 1/2" x 3 @ 1/2"F x 1/2"F	1 Ea.
4-PORTMAN-10	Cast 4 port – 3/4"F x 4 @ 1/2"F x 1/2"F	10/Box
5-PORTMAN	Cast 5 port – 3/4"F x 1@ 3/4"F x 4@1/2"F x 1/2"F	1 Ea.
5-PORTMAN-1	Cast 5 port – 1"F x 1@ 3/4"F x 4@1/2"F x 3/4"F	1 Ea.
5-PORTMAN-2	Cast 5 port – 1-1/4"F x 5 @ 3/4"F x 1"F	1 Ea.
5-PORTMAN-3	Cast 5 port – 1-1/4"F x 5 @ 1/2"F x 1"F	1 Ea.
4-PORTMAN-2	Cast 4 port – 1-1/2"F x 4 @ 3/4"F x 1-1/2"F	1 Ea.
4-PORTMAN-3	Cast 4 port – 2"F x 4 @ 1"F x 1-1/2"F	1 Ea.
111596-08	Coated Steel 4 Port – 3/4"F x 4 @ 1/2" F x 3/4"M	1 Ea.

APPLICATION

- Provides central distribution point for individual runs to each appliance.

MATERIAL / SPECIFICATIONS

- Coated 4 Port – Welded IPS Schedule 40 pipe.
- Cast 3, 4, and 5 Port – ASTM A47 32510 Malleable Iron.

Gastite Division
1116 Vaughn Parkway / Portland, TN 37148
800.662.0208 / www.gastite.com / gastite@gastite.com

2.2.4 Modular Stub System

XR-Appliance Stub-Outs

New!

Straight Stub-Outs Optional Brackets

Angle Stub-Out

Deck Stub-Out

Double Stub-Out

MODULAR STUB SYSTEM

Part No.	Description	Pkg. Qty.
XR-APSTUB-8-10	1/2"M x 1/2"M x 1-1/2" Stub length with 1/2" female fitting	10/Box
XR-L-APSTUB-8-10	1/2"M x 1/2"M x 2-1/4" Stub length with 1/2" female fitting	10/Box
XR-APSTUB-11-10	1/2"M x 1/2"M x 1-1/2" Stub length with 3/4" female fitting	10/Box
XR-L-APSTUB-11-10	1/2"M x 1/2"M x 2-1/4" Stub length with 3/4" female fitting	10/Box
XR-APSTUB-11-11-10	3/4"M x 3/4"M x 1-1/2" Stub length with 3/4" female fitting	10/Box
XR-L-APSTUB-11-11-10	3/4"M x 3/4"M x 2-1/4" Stub length with 3/4" female fitting	10/Box
FS-APSTUB-8-10	1/2" FlashShield™ x 1-1/2" Stub x 1/2" NPT	10/Box
FS-L-APSTUB-8-10	1/2" FlashShield™ x 2-1/4" Stub x 1/2" NPT	10/Box
FS-APSTUB-11-10	3/4" FlashShield™ x 1-1/2" Stub x 1/2" NPT	10/Box
FS-L-APSTUB-11-10	3/4" FlashShield™ x 2-1/4" Stub x 1/2" NPT	10/Box
FS-APSTUB-11-11-10	3/4" FlashShield™ x 1-1/2" Stub x 3/4" NPT	10/Box
FS-L-APSTUB-11-11-10	3/4" FlashShield™ x 2-1/4" Stub x 3/4" NPT	10/Box
1/2X6STUB-10	1/2"M x 6"L Straight Stub	10/Box
1/2X12STUB-10	1/2"M x 12"L Straight Stub	10/Box
3/4X6STUB-10	3/4"M x 6"L Straight Stub	10/Box
3/4X12STUB-10	3/4"M x 12"L Straight Stub	10/Box
1X6STUB-10	1"M x 6"L Straight Stub	10/Box
1X12STUB-10	1"M x 12"L Straight Stub	10/Box
1-1/4X6STUB-10	1-1/4"M x 6"L Straight Stub	10/Box
1-1/4X12STUB-10	1-1/4"M x 12"L Straight Stub	10/Box
1-1/2X6STUB-10	1-1/2"M x 6"L Straight Stub	10/Box
1-1/2X12STUB-10	1-1/2"M x 12"L Straight Stub	10/Box
ANGLE-STUB-01-10	1/2"M x 4-1/2"L x 72.5° Angle Stub	10/Box
STUB-BRACE	Stub Bracket (optional) – Fits All	1 Ea.
DBLSTUB-1-10	3/4" Inlet x 1/2" & 3/4" Outlet	10/Box
DECKSTUB-1/2x3-10	1/2" x 3" Bracket Stub-Out	10/Box

Application

- All Stubs create a fixed point "stub-out" on a wall or floor surface for meter and appliance attachment.
- Angle Stub-Out mounting plate provided at a 72-1/2° angle to facilitate mounting to angled side of most fireplace inserts.

Material / Specifications

- Schedule 40 steel pipe complying with material standard ASTM A-53.
- Exterior plating – Black oxide coating after all threading, forming and welding.

Features and Benefits

- Reduces the number of joints in the system where contractors typically fabricate "stub-outs" from rigid pipe nipples, elbows and couplings.
- Provides a fixed-point termination for installations where the appliances are not yet installed.
- Creates a more polished look to the overall installation.

2.2.5 Mounting Hardware

Termination Bracket

Manifold Bracket

Gas Load Center

MOUNTING HARDWARE

Part No.	Description	Pkg. Qty.
LBRACE-1-20	Term. Fitting Mounting Kit – Fits 3/8" - 1" CSST	20/Box
MBRACE-1-10	Manifold Mounting Kit – See below for mounting options	10/Box
MBRACE-3-10	Manifold Mounting Kit – See below for mounting options	10/Box
GLC1	Gas Load Center Kit – 14-1/2" x 24" x 3-1/2"	1 Ea.
GLC1-PANEL	Gas Load Center Cover Panel - Vented	1 Ea.
MSTRAPS-6-250	Metal Tubing Strap – Fits 3/8" CSST	250/Box
MSTRAPS-8-250	Metal Tubing Strap – Fits 1/2" CSST	250/Box
MSTRAPS-11-150	Metal Tubing Strap – Fits 3/4" CSST	150/Box
MSTRAPS-16-100	Metal Tubing Strap – Fits 1" CSST	100/Box
MSTRAPS-20-50	Metal Tubing Strap – Fits 1-1/4" CSST	50/Box
MSTRAPS-24-50	Metal Tubing Strap – Fits 1-1/2" CSST	50/Box
MSTRAPS-32-25	Metal Tubing Strap – Fits 2" CSST	25/Box
XR2OUTLETBOX-8	Recessed gas outlet box kit with 1/2" XR2 Fitting	1 Kit
XR2OUTLETBOX-11	Recessed gas outlet box kit with 3/4" XR2 Fitting	1 Kit
XR2OUTLETBOX-FR8	Firestop gas outlet box kit with 1/2" XR2 Fitting	1 Kit
XR2OUTLETBOX-FR11	Firestop gas outlet box kit with 3/4" XR2 Fitting	1 Kit
FSOUTLETBOX-8	Recessed Gas Outlet Box w/ 1/2" FlashShield™ Fitting	1 Kit
FSOUTLETBOX-11	Recessed Gas Outlet Box w/ 3/4" FlashShield™ Fitting	1 Kit
FSOUTLETBOX-FR8	Recessed FireStop Gas Outlet Box w/ 1/2" FlashShield™ Fitting	1 Kit
FSOUTLETBOX-FR11	Recessed FireStop Gas Outlet Box w/ 3/4" FlashShield™ Fitting	1 Kit

New!

Application

- Termination Bracket provides mounting surface for termination fitting assembly.
- Manifold Bracket provides mounting platform for manifolds, supplied with adhesive port labeling.
- Gas Load Center creates a recessed cabinet for a more polished look to manifold assembly.
- XR2OUTLETBOX creates a secure recessed termination point for connection to moveable appliances.

XR-Outlet Box

FS-Outlet Box

Material / Specifications

- Termination Fitting – 16 gauge galvanized sheet metal.
- MBRACE-1 Mounting Kit made of 16 gauge galvanized sheet metal.
  - Fits 3-PORTMAN, 4-PORTMAN, 5-PORTMAN and 111596-08.
- MBRACE-3 Mounting Kit made of 14 gauge galvanized sheet metal.
  - Fits 5-PORTMAN-1, 5-PORTMAN-2, 5-PORTMAN-3 and 4-PORTMAN-2.
- 4-PORTMAN-3 requires installer supplied mounting brackets.
- Gas Load Center – 20 gauge steel with a white, polyester powder coat finish.
- Metal Tubing Straps – 22, 20 or 18 gauge sheet metal, depending on size.

2.2.6 Pipe Support System

PIPE SUPPORT SYSTEM

Part No.	Description	Pkg. Qty.
RB0-10-4	Rubber Support Block (10"L x 4"H)	1 Ea.
RB1-10-5	Rubber Support Block w/ 7/8" Galv Steel Channel (10"L X 5"H)	1 Ea.
RB1-29-5	Rubber Support Block w/ 7/8" Galv Steel Channel (29"L X 5"H)	1 Ea.
RB2-10-12	Rubber Support Block w/Adj height 7/8" Galv Steel Channel (10"L x 5"-12"H)	1 Ea.

RB2

RB0

RB1

Application

- Effectively anchors and supports lightweight Gastite CSST, as well as other fuel gas piping materials to any roofing membrane.

Material / Specifications

- Made of 100% recycled material, UV resistant and waterproof.
- Will not damage expensive roof membranes.
- Installs on any roof with or without standard roof adhesives.

Gastite Division
1116 Vaughn Parkway / Portland, TN 37148
800.662.0208 / www.gastite.com / gastite@gastite.com

2.2.7 Strike Protection

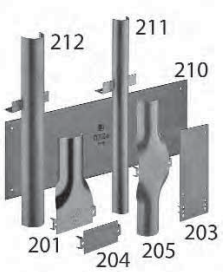

Striker Plates

Steel Conduit Coil & Cut Length

PROTECTION DEVICES – STRIKER PLATES & SILICONE TAPE

Part No.	Description	Pkg. Qty.
TFM204-100	Quarter Striker Plate – 3" x 2"	100/Box
TFM201-50	Half Striker Plate – 3" x 7"	50/Box
TFM203-50	Three-Quarter Striker Plate – 3" x 8"	50/Box
TFM205-25	Full Striker Plate – 3" x 12"	25/Box
TFM210-10	6" x 17" Striker Plate	10/Box
TFM211-25	Full (Drop-In) Striker Plate – 1/2" & 3/4" CSST	25/Box
TFM212-25	Full (Drop-In) Striker Plate – 1" & 1 1/4" CSST	25/Box
SIL-TAPE	Self Bonding Silicone Tape – 1" x .015" x 12 yd / roll	1 Ea.

PROTECTION DEVICES – STEEL CONDUIT COILS

Part No.	Description	Pkg. Qty.
FLOPPY12	3/4" Coil steel conduit – Fits 3/8" CSST	50 Ft/Coil
FLOPPY16	1" Coil steel conduit – Fits 1/2" CSST	50 Ft/Coil
FLOPPY20	1-1/4" Coil steel conduit – Fits 3/4" CSST	25 Ft/Coil
FLOPPY24	1-1/2" Coil steel conduit – Fits 1" CSST	25 Ft/Coil
FLOPPY28	1-3/4" Coil steel conduit – Fits 1-1/4" CSST	25 Ft/Coil
FLOPPY36	2-1/4" Coil steel conduit – Fits 1-1/2" CSST	25 Ft/Coil
FLOPPY48	3" Coil steel conduit – Fits 2" CSST	25 Ft/Coil

PROTECTION DEVICES – STEEL CONDUIT COILS

Part No.	Description	Pkg. Qty.
LFLOPPY-12-50	3/4" – Cut to 1 foot length – Fits 3/8" CSST	50/Box
LFLOPPY-16-50	1" – Cut to 1 foot length – Fits 1/2" CSST	50/Box
LFLOPPY-20-25	1-1/4" – Cut to 1 foot length – Fits 3/4" CSST	25/Box
LFLOPPY-24-25	1-1/2" – Cut to 1 foot length – Fits 1" CSST	25/Box
LFLOPPY-28-25	1-3/4" – Cut to 1 foot length – Fits 1-1/4" CSST	25/Box
LFLOPPY 36-25	2-1/4" – Cut to 1 foot length – Fits 1-1/2" CSST	25/Box
LFLOPPY-48-25	3" – Cut to 1 foot length – Fits 2" CSST	25/Box

Application

- Striker plates used for protection where flexible gas piping passes through structural members and is restricted from moving to avoid nails, screws and other potential puncture threats.
- Steel conduit is used to provide additional protection where striker plates cannot be easily installed.

Material / Specifications

- Striker Plates – 16 gauge AISI1050 Carbon Steel Hardened to Rc 45.
- Steel Conduit – Strip wound interlocking steel.

2.2.8 Shut-Off Valves and Quick Connects

Ball Valve 90° Ball Valve

SHUT-OFF VALVES

Part No.	Description	Pkg. Qty.
T100-1/2-20	1/2" Ball Valve rated to 125 psi	20/Box
T100-3/4-10	3/4" Ball Valve rated to 125 psi	10/Box
T100-1-1/4-5	1-1/4" Ball Valve rated to 125 psi	5/Box
T90-1/2-10	1/2" 90 Degree Shut-Off Valve	10/Box
T90-3/4-10	3/4" 90 Degree Shut-Off Valve	10/Box

Stainless Steel & PVC Quick Connect Boxes

QUICK CONNECT AND ACCESSORIES

Part No.	Description	Pkg. Qty.
T103029	1/2" Quick Connect Valve	1 Ea.
OUTFLEX-3/8	Outdoor Flex Connector – 3/8" NPT x 12'	1 Ea.
QCBOXPW	1/2" Quick Connect Box White PVC- Surface Mounted	1 Ea.
QCBOXPG	1/2" Quick Connect Box Gray PVC- Surface Mounted	1 Ea.
QCBOXSS	1/2" Quick Connect Box Stainless Steel - Recessed Mounted	1 Ea.

Application

- Ball Valves are used to control gas flow to appliances and pounds-to-inches regulator.
- Quick-Connect valve and accessories provide a safe and easy "quick-connect" for barbecue grills, space heaters and decorative lighting.

Material / Specifications

- Ball Valve - ANSI/ASME B16.33.
- Quick Connect and Accessories – ANSI Z21.15, CAN 9.1,9.2, 6.9 and AGA/CGA 7-90/CR94-001.

2.2.9 Tubing Cutters and Accessories

Spud Wrench

Tubing Cutters

TUBING CUTTERS AND ACCESSORIES

Part No.	Description	Pkg. Qty.
GTSPUD	18" Smooth Jaw Spud Wrench	1 Ea.
GTCUTTER-SM	Cutter with flat rollers – 3/8" – 1"	1 Ea.
GTCUTTER-LG	Cutter with flat rollers – Up to 2"	1 Ea.
GTBLADE-SM-5	Replacement blade for GTCUTTER-SM	5 Ea.
GTBLADE-LG-5	Replacement blade for GTCUTTER-LG	5 Ea.

APPLICATION

- Tubing Cutters, fitted with cutting wheel designed to cut stainless steel, create clean cuts for optimal flaring of tubing.

MATERIAL / SPECIFICATIONS

- Aluminum alloy body.

2.2.10 Bonding Clamps

Bonding Clamp

BONDING CLAMPS

Model No.	Description	Pkg. Qty.
CWP1J	Bonding Clamp for 3/8" and 1/2" CSST	1 Ea.
CWP2J	Bonding Clamp for 3/4", 1" and 1-1/4" CSST	1 Ea.
CWP3J	Bonding Clamp for 1-1/2" and 2" CSST	1 Ea.

2.2.11 System Identification

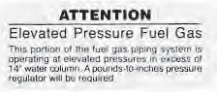

Adhesive Label

Metal Tag

SYSTEM IDENTIFICATION

Part No.	Description	Pkg. Qty.
EPAL-1-100	Adhesive Labels for elevated pressure identification	100/Roll
EPMT-1-100	Metal Tags for Uniform Plumbing Code compliance	100/Pkg.

Gastite Division
1116 Vaughn Parkway / Portland, TN 37148
800.662.0208 / www.gastite.com / gastite@gastite.com

2.2.12 Regulators

Maxitrol Regulators

Maxitrol Regulators with OPD

Oara Regulators

MAXITROL REGULATORS

Part No.	Description	Pkg. Qty.
T325-3-44	250 MBTU of NG @ 8" w.c. with 1/2" NPT inlet/outlet	1 Ea.
T325-3-44P	355 MBTU of LP @ 11" w.c. with 1/2" NPT inlet/outlet	1 Ea.
T325-5-2	425 MBTU of NG @ 8" w.c. with 1/2" NPT inlet/outlet	1 Ea.
T325-5-44	550 MBTU of NG @ 8" w.c. with 3/4" NPT inlet/outlet	1 Ea.
T325-5-44P	810 MBTU of LP @ 11" w.c. with 3/4" NPT inlet/outlet	1 Ea.
T325-5-3	550 MBTU of NG @ 8" w.c. with 1" NPT inlet/outlet	1 Ea.
T325-5-3P	810 MBTU of LP @ 11" w.c. with 1" NPT inlet/outlet	1 Ea.
T325-7L-44*	1,000 MBTU of NG @ 8" w.c. with 1-1/4" NPT inlet/outlet	1 Ea.
T325-3L48	200 MBTU of NG @ 8" w.c. with 1/2" NPT inlet/outlet & OPD	1 Ea.
T325-5AL600	425 MBTU of NG @ 8" w.c. with 3/4" NPT inlet/outlet & OPD	1 Ea.

OARA REGULATORS

Part No.	Description	Pkg. Qty.
REG8-300	250 MBTU of NG @ 8" w.c. with 1/2" NPT inlet/outlet	1 Ea.
REG11-300	355 MBTU of LP @ 11" w.c. with 1/2" NPT inlet/outlet	1 Ea.
REG8-600	550 MBTU of NG @ 8" w.c. with 3/4" NPT inlet/outlet	1 Ea.
REG11-600	810 MBTU of LP @ 11" w.c. with 3/4" NPT inlet/outlet	1 Ea.
VP3	Outdoor Vent Protector (325-3), 1/8" NPT	1 Ea.
VLP-3	Vent Line Protector for end termination	1 Ea.

*** Vent limiters not available.**

Note: Pipe thread size should never be used to determine regulator sizing.
Please refer to section 4.8 for proper regulator selection.

Application

- For use in elevated pressure systems (in excess of 1/2 psi) to reduce pressure to standard appliance use levels.
- Outdoor vent protector is used when vent-limiting orifice is removed for outdoor installation of regulator.

Material / Specifications

- 2 psi inlet pressure line models available in 8” w.c. and 11” w.c. outlet pressures.
- 5 psi inlet pressure (OPD) models available in 8” w.c. (field adjustment to 11” w.c.) outlet pressures.

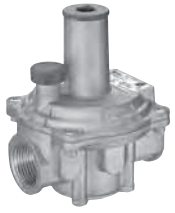

Pietro Fiorentini Regulators

PIETRO FIORENTINI REGULATORS

Part No.	Description	Pkg. Qty.
30052-NG	**848 MBTU of NG @ 8" w.c. with 3/4" NPT inlet/outlet**	**1 Ea.**
30053-NG	**1,059 MBTU of NG @ 8" w.c. with 1" NPT inlet/outlet**	**1 Ea.**
30153-NG	**5,297 MBTU of NG @ 8" w.c. with 1-1/4" NPT inlet/outlet**	**1 Ea.**
30052-LP	**1,285 MBTU of LP @ 11" w.c. with 3/4" NPT inlet/outlet**	**1 Ea.**

Notes

Gastite Division
1116 Vaughn Parkway / Portland, TN 37148
800.662.0208 / www.gastite.com / gastite@gastite.com

Gastite®/FlashShield™ CSST Worksheet

Project / Location: Drawn By:

Contact Phone: Date:

Description:

System Description

System Data and Requirements

	Name of Run	Supply Pressure (Lbs. or In.)	Length of Run (Ft.)	Load of Run (CFH)	Press. Drop (LBS. or In.)	Tube Diameter (Size or In.)	Delivery Press. (LBS. or In.)	Comments
A								
B								
C								
D								
E								
F								
G								
H								
I								
J								
K								
L								
M								
N								
O								

To be copied: For Planning and Design of the Gastite®/FlashShield Piping System. Visit www.gastite.com for a downloadable version of this worksheet.

Gastite Division
1116 Vaughn Parkway / Portland, TN 37148
800.662.0208 / www.gastite.com / gastite@gastite.com

SECTION 3.0 SYSTEM CONFIGURATION

3.1 Configuration

3.1.1 Introduction

This section is intended to help in the design and sizing of both Gastite® and FlashShield™ CSST fuel gas piping systems. The form printed on the previous page is to aid in keeping track of the system requirements as well as organizing the system configuration and sizing numbers. Refer to the Gastite Web site (www.gastite.com) for additional sizing tools.

The Gastite®/FlashShield™ gas piping system is required to be tested, listed, and installed in accordance with the Standard For Fuel Gas Piping Systems Using Corrugated Stainless Steel Tubing, ANSI LC1-2005. This standard, among other things, requires the manufacturer to provide installation instructions including the necessary pipe sizing tables and methods of sizing.

3.1.2 System Requirements

- Determine the local piping restrictions prior to installing the flexible gas piping. Confirm that the local administrative authority has accepted the use of flexible gas piping. Corrugated Stainless Steel Tubing has been accepted by all major code bodies, but local or state adoption of these codes often lags behind. Check with the local administrative authority or an authorized Gastite®/FlashShield distributor for approval in your area.

- Determine metered (supply) pressure. A gauge can be used to measure the supply pressure or the utility will provide a supply pressure rating.

- Determine appliance demand. Every appliance will have a manufacture's nameplate containing BTUH or CFH requirements as well as minimum and maximum operating pressures.

- Refer to building plans or prepare a sketch showing the location of each appliance. When preparing this sketch keep in mind the safest, easiest, and shortest distance locations to run the piping. Label the pipe segments and the corresponding lengths. Take note of fittings needed e.g. tees, manifolds, reducers.

3.1.3 Reference Data for Proper System Sizing

- Determine the total capacity needed for all appliances. CFH or BTUH equivalents for natural gas or propane can be obtained from the local gas utility or propane supplier. The capacity tables within this guide or other approved CSST tables should be used to determine pipe sizing for both Gastite® and FlashShield needed to meet BTUH input load requirements.

Table 3-1 Reference Data for Proper System Sizing

Pressure Conversion Factors			Fuel Gas Information		
1/4 psi =	6.921"WC =	(approx. 7"WC)		Natural Gas	Propane
1/2 psi =	13.842"WC =	(approx. 14"WC)	BTU per Cubic Foot =	1000	2516
1 psi =	27.684"WC =	(approx. 28"WC)	Specific Gravity =	0.6	1.52
2 psi =	55.368"WC =	(approx. 56"WC)	**Note:** "Pressure Drop Curves for Gastite® CSST" are expressed in terms of Cubic Feet per Hour (CFH). To determine the CFH for Natural Gas, divide the BTU load by 1000. To determine the CFH for Propane, divide the BTU load by 2516.		
5 psi =	138.42"WC =	(approx. 140"WC)			

Refer to Section 7.0 for gases with a specific gravity other than 0.60.

Gastite Division
1116 Vaughn Parkway / Portland, TN 37148
800.662.0208 / www.gastite.com / gastite@gastite.com

3.1.4 Determining System Layout

a) Series Systems

A series layout (Fig 3-1) is the most common arrangement utilized for rigid pipe systems for low pressure. These usually consist of a main run (header) with tees branching off to each appliance. In a traditional series system, the service pressure down stream of the meter is typically less than 1/2 PSI.

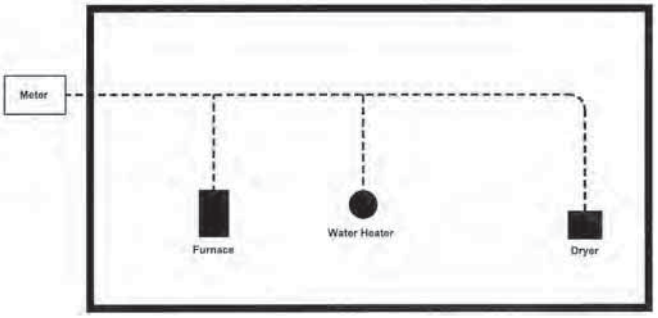

Fig. 3-1

b) Parallel Systems

In a parallel system (Fig. 3-2) a main run from the meter supplies a central distribution manifold. The appliances are serviced by individual runs from the manifold. The manifold station is best located close to the greatest load, typically the boiler or furnace.

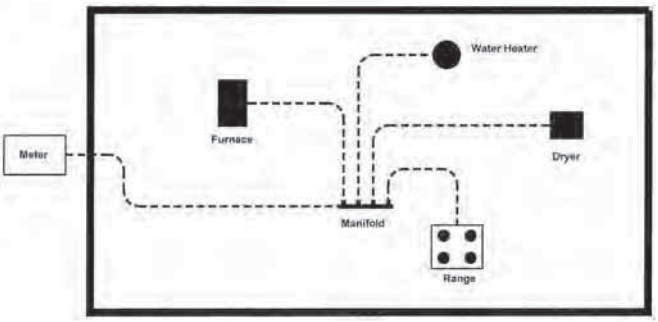

Fig. 3-2

c) Dual Pressure System

A Dual Pressure system (Fig. 3-3, 3-4) incorporates two operating pressures downstream from the meter. The first pressure, set by the service regulator at the meter, is usually 2 PSI but can be higher or lower depending on code restrictions and gas company policy. This part of the system is sized separately and ends at the pounds-to-inches regulator inlet. Tables 4-7, 4-8 and 4-9 show maximum loads vs. inlet pressures to the regulator.

The second pressure, at the outlet of the pounds-to-inches regulator, is under 1/2 PSI; usually 8"WC for natural gas and 11"WC for propane regulators supplied by Gastite®. Generally, a parallel system requires a higher total footage of smaller diameter tubing and fewer fittings compared to a series layout.

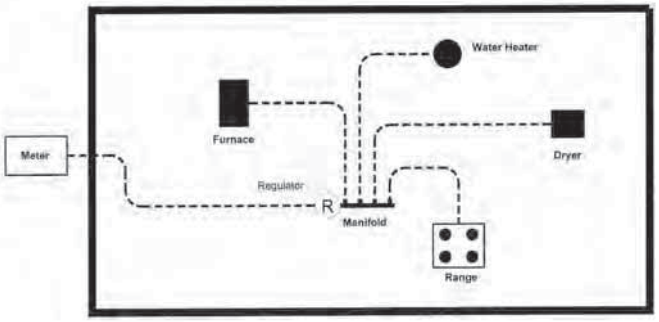

Fig. 3-3

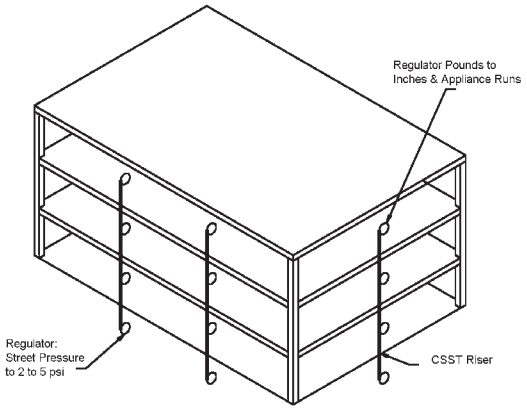

Fig. 3-4
Multi-Unit Apartment Building

d) Multiple Manifold System

For those installations in which the energy load demand is large or the appliances are installed throughout the structure with long distances from the meter, a multiple manifold system may be used (Fig. 3-5, 3-6). Elevated pressure systems are a safe, efficient method of providing for larger BTUH load demands while maintaining smaller pipe diameters.

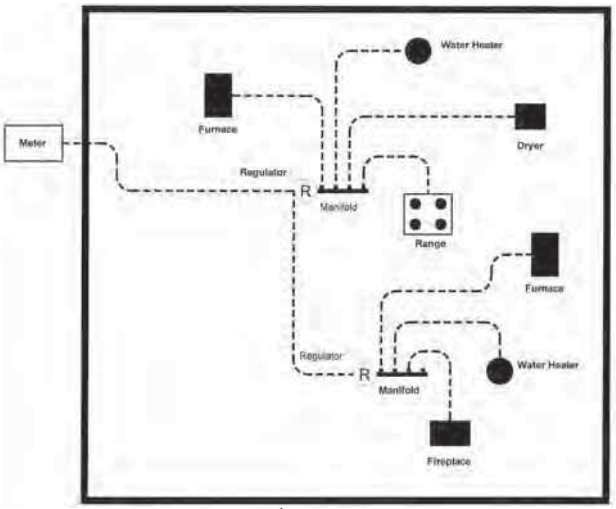

Fig. 3-5

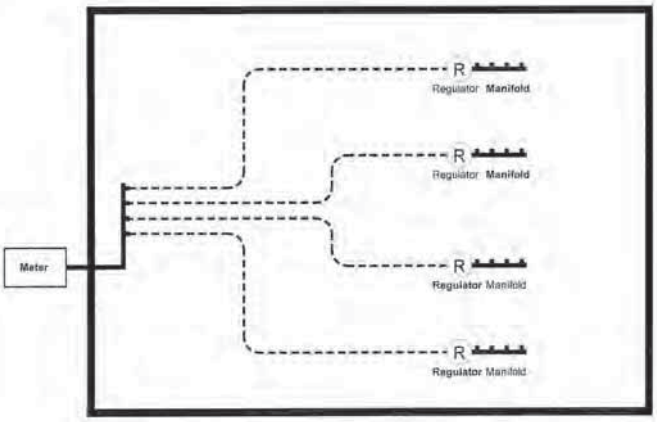

Fig. 3-6

e) Combination Steel / CSST System (Hybrid)

In a hybrid system (Fig. 3-7), corrugated stainless steel tubing is used in combination with rigid pipe or copper tubing. In lower pressure systems it is often advantageous to use both CSST and rigid pipe to help minimize pressure drops typically encountered on systems with high loads and/or long runs. Gastite® Flexible Gas Piping is approved for use in combination with all approved fuel gas-piping materials by using approved pipe threads at the interface.

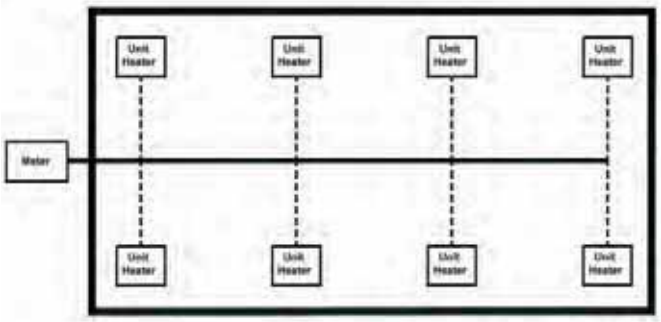

Fig. 3-7

f) Elevated Pressure System

In a complete elevated pressure system (Fig. 3-8), corrugated stainless steel tubing is used to deliver pressures in excess of 1/2 PSI to a pounds-to-inches regulator positioned directly in front of each appliance. This is an alternate method of installation used to minimize pipe size on systems with high loads and/or long runs. Regulators shall be sized per the largest single appliance, see Table 4-10.

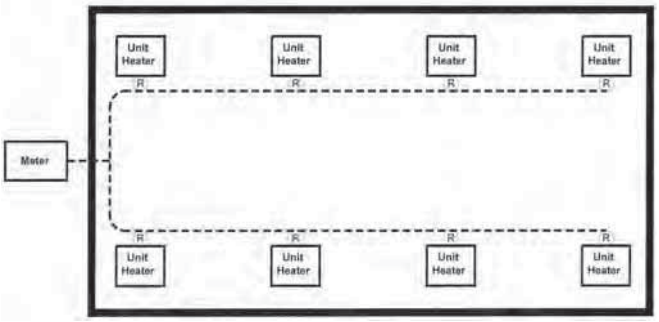

Fig. 3-8

Gastite Division
1116 Vaughn Parkway / Portland, TN 37148
800.662.0208 / www.gastite.com / gastite@gastite.com

3.1.5 Allowable Pressure Drop

With respect to gas pipe sizing, the intent of all model codes is to ensure that there is sufficient gas volume and pressure supplied to the appliance for proper operation. Language from the International Fuel Gas Code clearly illustrates this point.

> *"Allowable Pressure Drop: The design pressure loss on any piping system under maximum probable flow conditions, from point of delivery to the inlet connection of the equipment, shall be such that the supply pressure at the equipment is greater than the minimum pressure required for proper equipment operation."*

The Gastite®/FlashShield™ low-pressure tables are intended for use at a system pressure of 1/2 PSI or less, which encompasses the range of commonly delivered utility pressures and equipment requirements. To determine which table to use determine the system's allowable pressure drop. The appropriate pressure drop can be calculated by subtracting the appliance inlet pressure (typically 5"WC for NG, 10.5"WC for LPG) from the gas source pressure (gas meter for NG, secondary regulator for LPG). Use the Gastite®/FlashShield capacity table labeled with the appropriate allowable pressure drop and gas type. Increasing the available pressure drop will increase the available BTUHs, thus decreasing pipe sizes. It is advantageous to allow for a larger pressure drop.

The Summation Method of pipe sizing calculates the actual pressure loss through each section of pipe. The sum of all the losses is subtracted from the starting supply pressure to determine the inlet pressure to each appliance. The appliance inlet pressure must fall within the manufacturer's range for proper operation.

Note: Regardless of sizing method employed, the typical NG system should be sized for a minimum appliance inlet pressure of 5"WC and 10.5"WC for LPG system. Pressures less than the typical minimums may be sufficient for proper appliance operation but should be reviewed with the manufacturers' input rating and the local administering authority. Conversely, some modern higher performance appliances require an inlet pressure greater than the typical minimums. Check the manufacturers' input rating before sizing.

3.1.6 Sizing Methods

Capacity Tables from this Guide (Section 7) or appropriate code approved tables must be used when sizing Gastite®/FlashShield™ CSST. The sizing tables used in this manual include losses for four 90-degree bends, and two end fittings. Tubing runs with larger numbers of bends and/or fittings should be increased by an equivalent length of tubing to the following equation: L = 1.3 (N): where "L" is additional length of tubing, and "N" is the number of additional fittings, or 90 degree bends.

Gastite®'s Longest Run tables and Summation tables are produced from the same fluid flow equations. As such, they will provide the same results taking into account any rounding of distance or capacity. These fluid equations come from data produced by a third party laboratory. The testing was performed on actual Gastite®/FlashShield™ CSST while tables in the code reflect the most restrictive CSST.

The Longest Run Method:

A modified version of the longest run (commonly used in conventional rigid pipe systems) is presented here and used in Examples 1, 2 & 3. This method may be used for any pressure as listed in the appropriate Capacity Table.

For sizing each length of pipe, determine the total gas load for all appliances serviced by that section and the maximum distance over which that particular section delivers gas. The maximum distance includes overall length from the meter to the furthest appliance serviced by that run. Refer to Section 7 Capacity Tables for the maximum flow capacity of CSST at the required piping length.

For sizing dual-pressure systems, the piping from the meter to the pounds-to-inches regulator is sized separately from the piping downstream of the regulator outlet. This procedure is shown in Examples 4 & 5.

Sizing for a Hybrid System (one that includes both rigid pipe and CSST) is accomplished by using the longest run method to determine the appropriate pipe size for a given load and run length. Each segment of the piping system uses the appropriate sizing table for that particular piping material. This procedure is shown in Examples 6 & 7.

Summation Method:

An alternative sizing method is the Summation Method which considers a summation of the pressure losses through each section of piping. This procedure is utilized for the designer whose requirements are not satisfied by the previously described methods. The summation method can be used for system pressures and pressure drops other than indicated in the sizing tables for longest run. This method allows full use of the maximum flow capacity of CSST. In this fashion, a designer can minimize piping size (or maximize flow capacity) with greater accuracy in more complicated arrangements. The summation method is shown in Examples 8 & 9.

3.1.7 Modifying an Existing System

Gastite®/FlashShield™ fittings transition from CSST to pipe thread (NPT) and may be run in conjunction with all other approved fuel gas piping (iron pipe, polyethylene tubing, copper tubing, etc.). When adding appliances to an existing system the installer must verify whether the existing system, upstream of the lines to be added, can support the additional load.

A retrofitted line, even when properly sized, added to a system that can't support the additional load, can adversely effect all the other appliances in the system.

When the existing system will not support the additional load several installation options exist. A new trunk line(s) can be run replacing the under-sized system upstream of the retrofitted appliances. A dedicated trunk line can be run from the gas source to the new appliance. The system pressure may be elevated, thus increasing the allowable pressure drop, after which the existing trunk lines may afford sufficiently higher flow capacity to handle the existing and new appliances.

If the piping is visible or the existing run lengths are known, the entire system can be resized using either aforementioned sizing method (Longest Run or Summation). The system shall be resized with an appropriate sizing table based on the affordable pressure drop. When the piping is not visible or accessible for measurement, approximated lengths should be rounded up.

3.2 Sizing Procedures and Exercises

3.2.1 Sizing Examples

While the following examples show typical applications of the sizing methods they do not address all of the system configurations in which they can be used. In general, Longest Run and Summation can be used with any pressure or system configuration (series, parallel, dual-pressure, hybrid, etc.).

The following exercises illustrate various design layouts, pressure drops and sizing methods. To further highlight the differences in methods and designs, examples 1-8 use the same appliance layout and load.

Gastite Division
1116 Vaughn Parkway / Portland, TN 37148
800.662.0208 / www.gastite.com / gastite@gastite.com

3.2.2 Example 1 - Series System – 6"WC

Figure 3-9 below shows a typical single-family house installation with five (5) appliances. The piping is arranged in series with a main run branching at the appliances. The utility company's supply pressure (downstream of the meter) is 6"WC. The utility company advises that the specific gravity of the gas delivered will be 0.60 and the energy content is 1 CFH = 1000 BTUH. The allowable pressure drop across the system has been determined to be 1.0"WC (supply pressure 6"WC – appliance requirement 5"WC).

Fig. 3-9

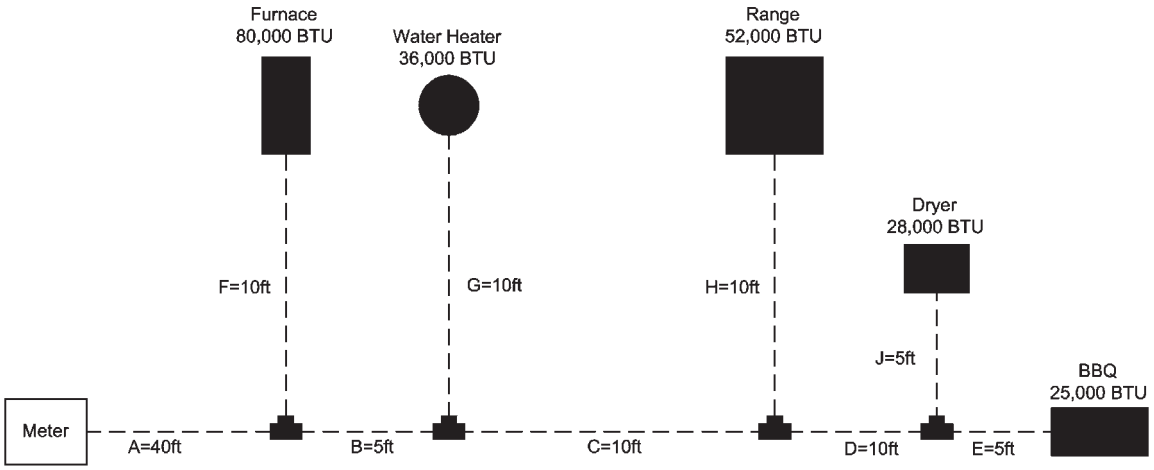

Table 3-2				
Section Description	Load Delivered by Section	Section Length	Run Length	Tube Size
"A" – Trunk	221 CFH = 221,000 BTUH	40 feet	70 feet	1-1/4 "CSST
"B" – Trunk	141 CFH = 141,000 BTUH	5 feet	70 feet	1" CSST
"C" – Trunk	105 CFH = 105,000 BTUH	10 feet	70 feet	1" CSST
"D" – Trunk	53 CFH = 53,000 BTUH	10 feet	70 feet	3/4" CSST
"E" – BBQ	25 CFH = 25,000 BTUH	5 feet	70 feet	1/2" CSST
"F" – Furnace	80 CFH = 80,000 BTUH	10 feet	50 feet	3/4" CSST
"G" – Water Heater	36 CFH = 36,000 BTUH	10 feet	55 feet	1/2" CSST
"H" – Range	52 CFH = 52,000 BTUH	10 feet	65 feet	3/4" CSST
"J" – Dryer	28 CFH = 28,000 BTUH	5 feet	70 feet	1/2" CSST
Run Length for Trunk Sections = Distance from meter to furthest appliance (Longest Run)				
Run Length for Appliance Sections = Distance from meter to each appliance				

SIZING RUN "A"

- Run "A" is sized by the total load of all appliances and the run length from the meter to the furthest appliance
- The total load of all appliances is 80 + 36 + 52 + 28 + 25 = 221CFH
- The run length to the BBQ (furthest appliance) is 40 + 5 + 10 + 10 + 5 = 70ft
- Referring to Table 7-2 (1.0"WC pressure drop): for a 70ft run, 1-1/4" CSST has a capacity over 221CFH (actual: 338)

SIZING RUN "B"

- Run "B" is sized by the total load of all supplied appliances and the run length from the meter to the furthest appliance
- The total load of the supplied appliances is 36 + 52 + 28 + 25 = 141CFH
- The run length to the BBQ (furthest appliance) is 40 + 5 + 10 + 10 + 5 = 70ft
- Referring to Table 7-2 (1.0"WC pressure drop) for a 70ft run, 1" CSST has a capacity over 141CFH (actual: 202)

SIZING RUN “C”
- Run “C” is sized by the total load of all supplied appliances and the run length from the meter to the furthest appliance
- The total load of all appliances is 52 + 28 + 25 = 105CFH
- The run length to the BBQ (furthest appliance) is 40 + 5 + 10 + 10 + 5 = 70ft
- Referring to Table 7-2 (1.0"WC pressure drop): for a 70ft run, 1" CSST has a capacity over 105CFH (actual: 202)

SIZING RUN “D”
- Run “D” is sized by the total load of all supplied appliances and the run length from the meter to the furthest appliance
- The total load of the BBQ and the dryer is 25 + 28 = 53CFH
- The run length to the BBQ (furthest appliance) is 40 + 5 + 10 + 10 + 5 = 70ft
- Referring to Table 7-2 (1.0"WC pressure drop) for a 70ft run, 3/4" CSST has a capacity over 53CFH (actual: 89)

SIZING RUN “E”
- Run “E” is sized by the total load of the supplied appliance and the run length from the meter to the furthest appliance
- The load of the BBQ is 25CFH
- The run length to the BBQ is 40 + 5 + 10 + 10 + 5 = 70ft
- Referring to Table 7-2 (1.0"WC pressure drop) for a 70ft run, 1/2" CSST has a capacity over 25CFH (actual: 50)

SIZING RUN “F”
- Run “F” is sized by the load of the supplied appliance and the run length from the meter to the supplied appliance
- The load of the furnace is 80CFH
- The run length to the furnace is 40 + 10 = 50ft
- Referring to Table 7-2 (1.0"WC pressure drop) for a 50ft run, 3/4" CSST has a capacity over 80CFH (actual: 104)

SIZING RUN “G”
- Run “G” is sized by the load of the supplied appliance and the run length to the supplied appliance
- The load of the water heater is 36CFH
- The run length to the water heater is 40 + 5 + 10 = 55ft
- Referring to Table 7-2 (1.0"WC pressure drop) for a 60ft run, 1/2" CSST has a capacity over 36CFH (actual: 54)

SIZING RUN “H”
- Run “H” is sized by the load of the supplied appliance and the run length to the supplied appliance
- The load of the range is 52CFH
- The run length to the range is 40 + 5 + 10 + 10 = 65ft
- Referring to Table 7-2 (1.0"WC pressure drop) for a 70ft run, 3/4" CSST has a capacity over 52CFH (actual: 89)

SIZING RUN “J”
- Run “J” is sized by the load of the supplied appliance and the run length to the supplied appliance
- The load of the dryer is 28CFH
- The run length to the dryer is 40 + 5 + 10 + 10 + 5 = 70ft
- Referring to Table 7-2 (1.0"WC pressure drop) for a 70ft run, 1/2" CSST has a capacity over 28CFH (actual: 50)

Gastite Division
1116 Vaughn Parkway / Portland, TN 37148
800.662.0208 / www.gastite.com / gastite@gastite.com

3.2.3 Example 2 - Parallel System – 6"WC

Figure 3-10 below shows the same house as Example 1. The piping is arranged in parallel fashion, with individual CSST appliance runs supplied by a main distribution manifold. The utility company's supply pressure (downstream of the meter) is 6"WC. The utility company advises that the specific gravity of the gas delivered will be 0.60 and the energy content is 1 CFH = 1000 BTUH. The allowable pressure drop across the system has been determined to be 1.0"WC (supply pressure 6"WC - appliance requirement 5"WC).

Fig. 3-10

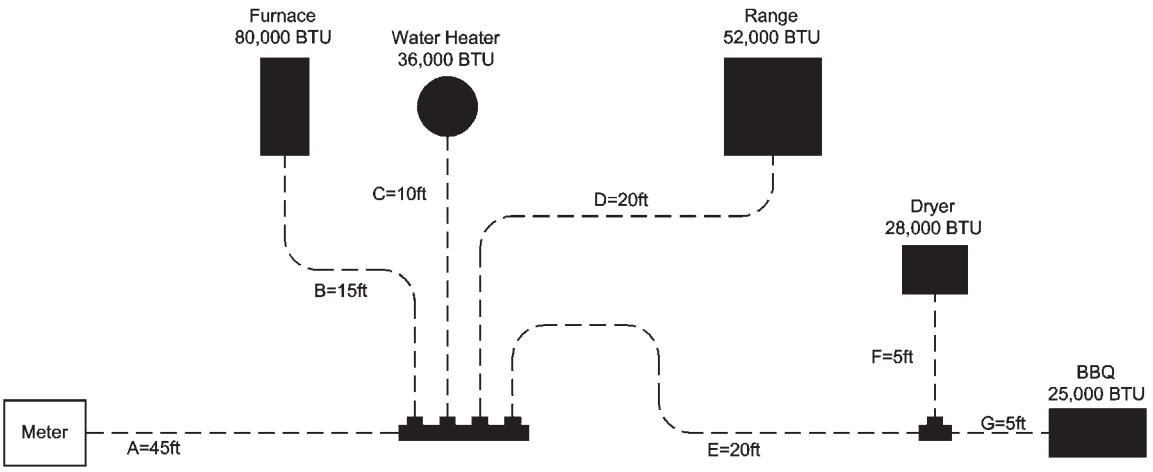

Table 3-3				
Section Description	Load Delivered by Section	Section Length	Run Length	Tube Size
"A" – Trunk	221 CFH = 221,000 BTUH	45 feet	70 feet	1-1/4" CSST
"B" – Furnace	80 CFH = 80,000 BTUH	15 feet	60 feet	3/4" CSST
"C" – Water Heater	36 CFH = 36,000 BTUH	10 feet	55 feet	1/2" CSST
"D" – Range	52 CFH = 52,000 BTUH	20 feet	65 feet	3/4" CSST
"E" – Dryer/BBQ Trunk	53 CFH = 53,000 BTUH	20 feet	70 feet	3/4" CSST
"F" – Dryer	28 CFH = 28,000 BTUH	5 feet	70 feet	1/2" CSST
"G" – BBQ	25 CFH = 25,000 BTUH	5 feet	70 feet	1/2" CSST
Run Length for Trunk Sections = Distance from meter to furthest appliance (Longest Run)				
Run Length for Appliance Sections = Distance from meter to each appliance				

SIZING RUN "A"

- Run "A" is sized by the total load of all appliances and the run length from the meter to the furthest appliance
- The total load of all appliances is 80 + 36 + 52 + 28 + 25 = 221CFH
- The run length to the BBQ (furthest appliance) is 45 + 20 + 5 = 70ft
- Referring to Table 7-2 (1.0"WC pressure drop): for a 70ft run, 1-1/4" CSST has a capacity over 221CFH (actual: 338)

SIZING RUN "B"

- Run "B" is sized by the load of the supplied appliance and the run length from the meter to the supplied appliance
- The load of the furnace is 80CFH
- The run length to the furnace is 45 + 15 = 60ft
- Referring to Table 7-2 (1.0"WC pressure drop) for a 60ft run, 3/4" CSST has a capacity over 80CFH (actual: 95)

SIZING RUN “C”
- Run “C” is sized by the load of the supplied appliance and the run length to the supplied appliance
- The load of the water heater is 36CFH
- The run length to the water heater is 45 + 10 = 55ft
- Referring to Table 7-2 (1.0"WC pressure drop) for a 60ft run, 1/2" CSST has a capacity over 36CFH (actual: 54)

SIZING RUN “D”
- Run “D” is sized by the load of the supplied appliance and the run length to the supplied appliance
- The load of the range is 52CFH
- The run length to the range is 45 + 20 = 65ft
- Referring to Table 7-2 (1.0"WC pressure drop) for a 70ft run, 3/4" CSST has a capacity over 52CFH (actual: 89)

SIZING RUN “E”
- Run “E” is sized by the total load of all supplied appliances and the run length from the meter to the furthest appliance
- The total load of the BBQ and the dryer is 25 + 28 = 53CFH
- The run length to the BBQ (furthest appliance) is 45 + 20 + 5 = 70ft
- Referring to Table 7-2 (1.0"WC pressure drop) for a 70ft run, 3/4" CSST has a capacity over 53CFH (actual: 89)

SIZING RUN “F”
- Run “F” is sized by the load of the supplied appliance and the run length to the supplied appliance
- The load of the dryer is 28CFH
- The run length to the dryer is 45 + 20 + 5 = 70ft
- Referring to Table 7-2 (1.0"WC pressure drop) for a 70ft run, 1/2" CSST has a capacity over 28CFH (actual: 50)

SIZING RUN “G”
- Run “G” is sized by the total load of the supplied appliance and the run length from the meter to the furthest appliance
- The load of the BBQ is 25CFH
- The run length to the BBQ is 45 + 20 + 5 = 70ft
- Referring to Table 7-2 (1.0"WC pressure drop) for a 70ft run, 1/2" CSST has a capacity over 25CFH (actual: 50)

Gastite Division
1116 Vaughn Parkway / Portland, TN 37148
800.662.0208 / www.gastite.com / gastite@gastite.com

3.2.4 Example 3 - Parallel System – 12-14"WC

Figure 3-11 below shows the same house and piping system as Example 2. The piping is arranged in parallel fashion, with individual CSST appliance runs supplied by a main distribution manifold. The utility company's supply pressure (downstream of the meter) is 12-14"WC. The utility company advises that the specific gravity of the gas delivered will be 0.60 and the energy content is 1 CFH = 1000 BTUH. The allowable pressure drop across the system has been determined to be 7"WC (supply pressure 12"WC - appliance requirement 5"WC). As there is no 7"WC pressure drop chart available we must use the next lowest chart: in this case the 6"WC pressure drop chart (Table 7-8).

Fig. 3-11

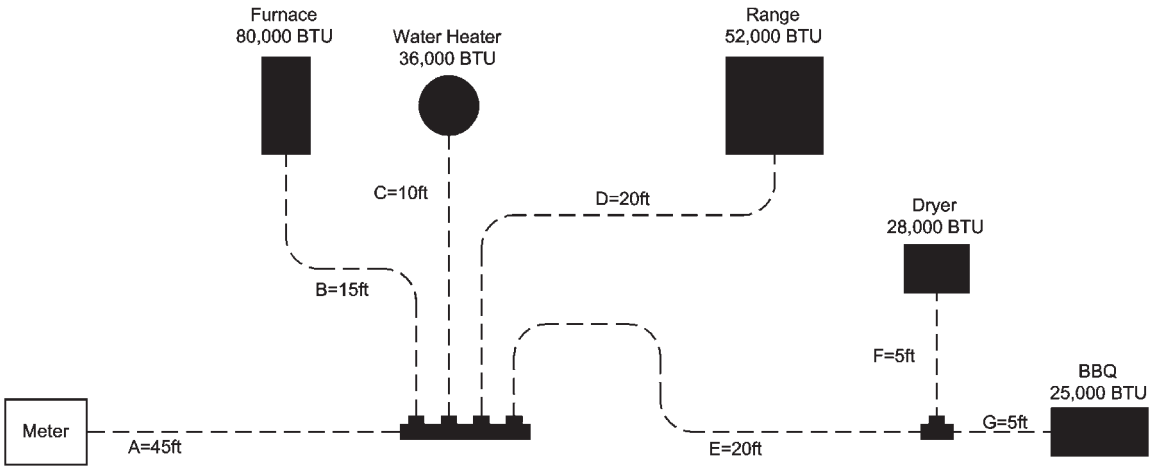

Table 3-4				
Section Description	Load Delivered by Section	Section Length	Run Length	Tube Size
"A" – Trunk	221 CFH = 221,000 BTUH	45 feet	70 feet	3/4" CSST
"B" – Furnace	80 CFH = 80,000 BTUH	15 feet	60 feet	1/2" CSST
"C" – Water Heater	36 CFH = 36,000 BTUH	10 feet	55 feet	3/8" CSST
"D" – Range	52 CFH = 52,000 BTUH	20 feet	65 feet	1/2" CSST
"E" – Dryer/BBQ Trunk	53 CFH = 53,000 BTUH	20 feet	70 feet	1/2" CSST
"F" – Dryer	28 CFH = 28,000 BTUH	5 feet	70 feet	3/8" CSST
"G" – BBQ	25 CFH = 25,000 BTUH	5 feet	70 feet	3/8" CSST
Run Length for Trunk Sections = Distance from meter to furthest appliance (Longest Run)				
Run Length for Appliance Sections = Distance from meter to each appliance				

SIZING RUN "A"

- Run "A" is sized by the total load of all appliances and the run length from the meter to the furthest appliance
- The total load of all appliances is 80 + 36 + 52 + 28 + 25 = 221CFH
- The run length to the BBQ (furthest appliance) is 45 + 20 + 5 = 70ft
- Referring to Table 7-8 (6.0"WC pressure drop) for a 70ft run, 3/4" CSST has a capacity over 221CFH (actual: 230)

SIZING RUN "B"

- Run "B" is sized by the load of the supplied appliance and the run length from the meter to the supplied appliance
- The load of the furnace is 80CFH
- The run length to the furnace is 45 + 15 = 60ft
- Referring to Table 7-8 (6.0"WC pressure drop) for a 60ft run, 1/2" CSST has a capacity over 80CFH (actual: 136)

SIZING RUN “C”
- Run “C” is sized by the load of the supplied appliance and the run length to the supplied appliance
- The load of the water heater is 36CFH
- The run length to the water heater is 45 + 10 = 55ft
- Referring to Table 7-8 (6.0"WC pressure drop) for a 60ft run, 3/8" CSST has a capacity over 36CFH (actual: 51)

SIZING RUN “D”
- Run “D” is sized by the load of the supplied appliance and the run length to the supplied appliance
- The load of the range is 52CFH
- The run length to the range is 45 + 20 = 65ft
- Referring to Table 7-8 (6.0"WC pressure drop) for a 70ft run, 1/2" CSST has a capacity over 52CFH (actual: 126)

SIZING RUN “E”
- Run “E” is sized by the total load of all supplied appliances and the run length from the meter to the furthest appliance
- The total load of the BBQ and the dryer is 25 + 28 = 53CFH
- The run length to the BBQ (furthest appliance) is 45 + 20 + 5 = 70ft
- Referring to Table 7-8 (6.0"WC pressure drop) for a 70ft run, 1/2" CSST has a capacity over 53CFH (actual: 126)

SIZING RUN “F”
- Run “F” is sized by the load of the supplied appliance and the run length to the supplied appliance
- The load of the dryer is 28CFH
- The run length to the dryer is 45 + 20 + 5 = 70ft
- Referring to Table 7-8 (6.0"WC pressure drop) for a 70ft run, 3/8" CSST has a capacity over 28CFH (actual: 46)

SIZING RUN “G”
- Run “G” is sized by the total load of the supplied appliance and the run length from the meter to the furthest appliance
- The total of the BBQ is 25CFH
- The run length to the BBQ is 45 + 20 + 5 = 70ft
- Referring to Table 7-8 (6.0"WC pressure drop) for a 70ft run, 3/8" CSST has a capacity over 25CFH (actual: 46)

Gastite Division
1116 Vaughn Parkway / Portland, TN 37148
800.662.0208 / www.gastite.com / gastite@gastite.com

3.2.5 Example 4 - Dual Pressure System – 2 PSI Trunk and 8"WC Appliance Runs

Figure 3-12 below shows the same house and similar piping system as Example 3. The piping is arranged in parallel fashion, with individual CSST appliance runs supplied by a main distribution manifold. A regulator is mounted at the manifold. The utility company's supply pressure (downstream of the meter) is 2psi. The utility company advises that the specific gravity of the gas delivered will be 0.60 and the energy content is 1 CFH = 1000 BTUH. The pounds-to-inches regulator is set to 8"WC. Downstream of the regulator the allowable pressure drop across the system has been determined to be 3"WC (supply pressure 8"WC - appliance requirement 5"WC). Upstream of the regulator the 2psi line pressure chart with a pressure drop of 1psi can be used. This will supply the regulator with the 1psi inlet pressure required for full capacity flow.

Fig. 3-12

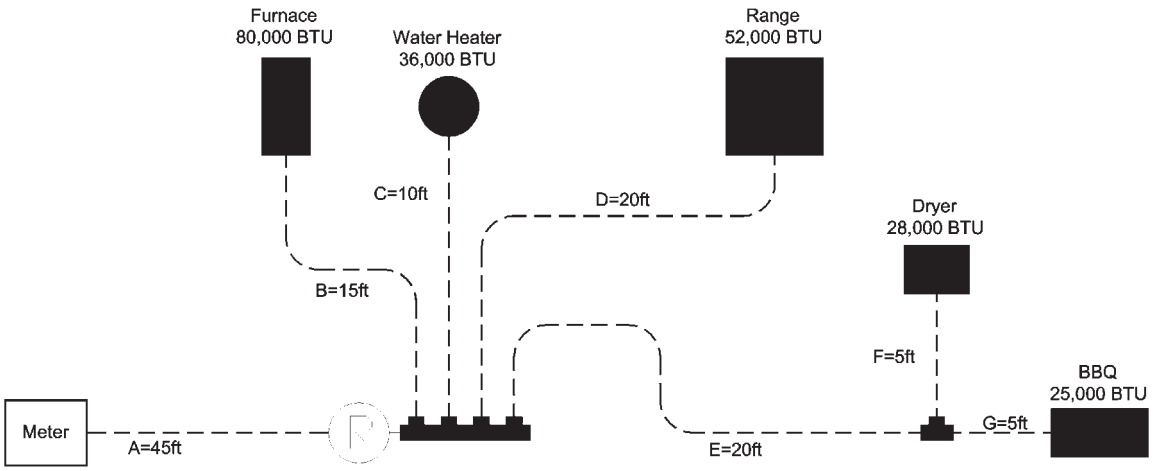

Table 3-5				
Section Description	Load Delivered by Section	Section Length	Run Length	Tube Size
"A" – Trunk	221 CFH = 221,000 BTUH	45 feet	45 feet	1/2" CSST
"B" – Furnace	80 CFH = 80,000 BTUH	15 feet	15 feet	1/2" CSST
"C" – Water Heater	36 CFH = 36,000 BTUH	10 feet	10 feet	3/8" CSST
"D" – Range	52 CFH = 52,000 BTUH	20 feet	20 feet	3/8" CSST
"E" – Dryer/BBQ	53 CFH = 53,000 BTUH	20 feet	25 feet	3/8" CSST
"F" – Dryer	28 CFH = 28,000 BTUH	5 feet	25 feet	3/8" CSST
"G" – BBQ	25 CFH = 25,000 BTUH	5 feet	25 feet	3/8" CSST
Run Length for Trunk Sections = Distance from meter to regulator				
Run Length for Appliance Sections = Distance from regulator to each appliance				

SIZING RUN "A"

- Run "A" is sized by the total load of all appliances and the run length from the meter to the regulator
- The total load of all appliances is 80 + 36 + 52 + 28 + 25 = 221CFH
- The run length to the regulator is 45ft
- Referring to Table 7-10 (2psi line pressure, 1psi pressure drop) for a 45ft run, 1/2" CSST has a capacity over 221CFH (actual: 276)

SIZING RUN “B”
- Run “B” is sized by the load of the supplied appliance and the run length from the regulator to the supplied appliance
- The load of the furnace is 80CFH
- The run length to the furnace is 15ft
- Referring to Table 7-5 (3.0"WC pressure drop) for a 15ft run, 1/2" CSST has a capacity over 80CFH (actual: 195)

SIZING RUN “C”
- Run “C” is sized by the load of the supplied appliance and the run length to the supplied appliance
- The load of the water heater is 36CFH
- The run length to the water heater is 10ft
- Referring to Table 7-5 (3.0"WC pressure drop) for a 10ft run, 3/8" CSST has a capacity over 36CFH (actual: 88)

SIZING RUN “D”
- Run “D” is sized by the load of the supplied appliance and the run length to the supplied appliance
- The load of the range is 52CFH
- The run length to the range is 20ft
- Referring to Table 7-5 (3.0"WC pressure drop) for a 20ft run, 3/8" CSST has a capacity over 52CFH (actual: 62)

SIZING RUN “E”
- Run “E” is sized by the total load of all supplied appliances and the run length from the regulator to the furthest appliance
- The total load of the BBQ and the dryer is 25 + 28 = 53CFH
- The run length to the BBQ (furthest appliance) is 20 + 5 = 25ft
- Referring to Table 7-5 (3.0"WC pressure drop) for a 25ft run, 3/8" CSST has a capacity over 53CFH (actual: 56)

SIZING RUN “F”
- Run “F” is sized by the load of the supplied appliance and the run length to the supplied appliance
- The load of the dryer is 28CFH
- The run length to the dryer is 20 + 5 = 25ft
- Referring to Table 7-5 (3.0"WC pressure drop) for a 25ft run, 3/8" CSST has a capacity over 28CFH (actual: 56)

SIZING RUN “G”
- Run “G” is sized by the total load of the supplied appliance and the run length from the regulator to the furthest appliance
- The load of the BBQ is 25CFH
- The run length to the BBQ is 20 + 5 = 25ft
- Referring to Table 7-5 (3.0"WC pressure drop) for a 25ft run, 3/8" CSST has a capacity over 25CFH (actual: 56)

Gastite Division
1116 Vaughn Parkway / Portland, TN 37148
800.662.0208 / www.gastite.com / gastite@gastite.com

3.2.6 Example 5 - Multiple Manifold System

Figure 3-13 below shows the same house and similar piping system as Example 4. The piping is arranged in parallel fashion, with individual CSST appliance runs supplied by two distribution manifolds. Regulators are mounted at each manifold. The utility company's supply pressure (downstream of the meter) is 2psi. The utility company advises that the specific gravity of the gas delivered will be 0.60 and the energy content is 1 CFH = 1000 BTUH. The pounds-to-inches regulators are set to 8"WC. Downstream of the regulators the allowable pressure drop across the system has been determined to be 3"WC (supply pressure 8"WC – appliance requirement 5"WC). Upstream of the regulators the 2psi line pressure chart with a pressure drop of 1psi can be used. This will supply the regulators with the 1psi inlet pressure required for full capacity flow.

Sizing of all appliance runs downstream from the pressure regulators is performed considering the length and load for each appliance as in the previous example.

To size the elevated pressure trunk lines, use the Longest Run Method to determine the trunk line sizes by adding the distance from the meter to the furthest regulator (trunk "A" + trunk "E"). This length is used to size both trunk lines. It important to note that the total load of the system is passing through trunk "A" while only the load of the second manifold system is passing through trunk "E".

Fig. 3-13

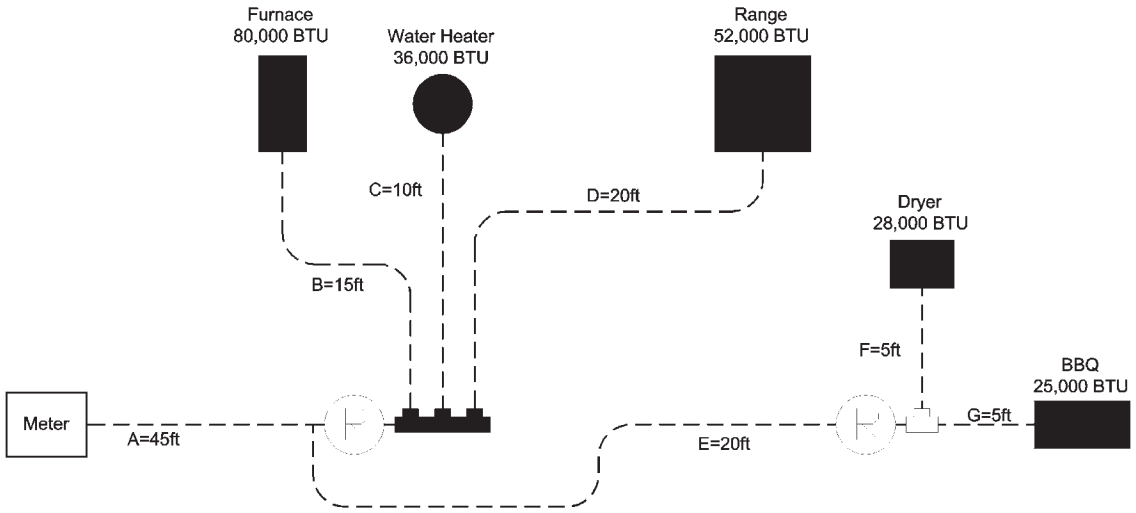

Table 3-6				
Section Description	Load Delivered by Section	Length	Longest Run	Tube Size
"A" – Trunk	221 CFH = 221,000 BTUH	45 feet	65 feet	1/2" CSST
"E" – Trunk	53 CFH = 53,000 BTUH	20 feet	65 feet	3/8" CSST
Longest Run for Trunk Section = Distance from meter to furthest regulator.				
Appliance runs are determined using the length and load for each section only.				

SIZING RUN "A"

- Run "A" is sized by the load of all appliances and the run length from the meter to the farthest regulator
- The total load of all appliances is 80 + 36 + 52 + 28 + 25 = 221CFH
- The run length to the farthest regulator is 45 + 20 = 65ft
- Referring to Table 7-10 (2psi with a 1psi drop): for a 70-ft run, 1/2" CSST has a capacity over 221CFH (232 actual)

SIZING RUN "E"

- Run "E" is sized by the load of all supplied appliances and the run length from the meter to the farthest regulator
- The total load of all appliances is 28 + 25 = 53CFH
- The run length to the farthest regulator is 45 + 20 = 65ft
- Referring to Table 7-10 (2psi with a 1psi drop): for a 70-ft run, 3/8" CSST has a capacity over 53CFH (93 actual)

NOTE: Gastite® recommends that trunk lines be 1/2" minimum. Therefore, this trunk run should be upsized to 1/2".

Gastite Division
1116 Vaughn Parkway / Portland, TN 37148
800.662.0208 / www.gastite.com / gastite@gastite.com

3.2.7 Example 6 - Series System – 7"WC - Hybrid

Figure 3-14 below shows a typical single-family house retrofit installation with five (5) appliances, 2 of which are added onto an existing black pipe system. The piping is arranged in series with a main run branching at the appliances. The utility company's supply pressure (downstream of the meter) is 7"WC. The utility company advises that the specific gravity of the gas delivered will be 0.60 and the energy content is 1 CFH = 1000 BTUH. The allowable pressure drop across the system has been determined to be 2.0"WC (supply pressure 7"WC - appliance requirement 5"WC).

Fig. 3-14

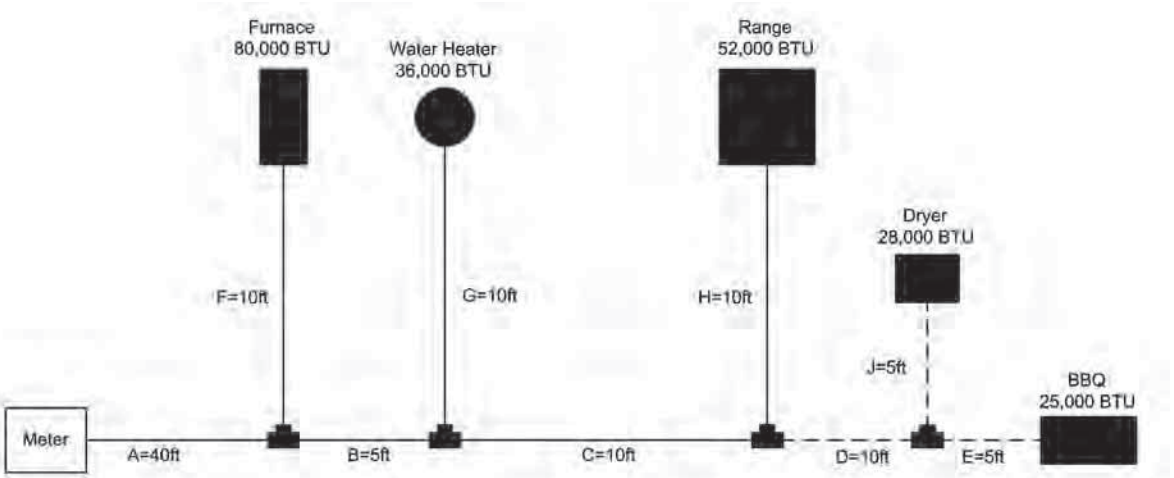

Note: Rigid pipe sized using a 0.5"WC pressure drop table, as no 2.0"WC pressure drop table for Rigid pipe is available.

Table 3-7				
Section Description	Load Delivered by Section	Section Length	Run Length	Tube Size
"A" – Rigid Trunk	221 CFH = 221,000 BTUH	40 feet	70 feet	1" Rigid
"B" – Rigid Trunk	141 CFH = 140,000 BTUH	5 feet	70 feet	1" Rigid
"C" – Rigid Trunk	105 CFH = 105,000 BTUH	10 feet	70 feet	3/4" Rigid
"D" – CSST Trunk	53 CFH = 53,000 BTUH	10 feet	70 feet	1/2" CSST
"E" – BBQ	25 CFH = 25,000 BTUH	5 feet	70 feet	1/2" CSST
"F" – Furnace	80 CFH = 80,000 BTUH	10 feet	50 feet	3/4" Rigid
"G" – Water Heater	36 CFH = 36,000 BTUH	10 feet	55 feet	3/8" Rigid
"H" – Range	52 CFH = 52,000 BTUH	10 feet	65 feet	1/2" Rigid
"J" – Dryer	28 CFH = 28,000 BTUH	5 feet	70 feet	1/2" CSST
Run Length for Trunk Sections = Distance from meter to furthest appliance (Longest Run)				
Run Length for Appliance Sections = Distance from meter to each appliance				

SIZING RUN "A"

- Run "A" is sized by the total load of all appliances and the run length from the meter to the furthest appliance
- The total load of all appliances is 80 + 36 + 52 + 28 + 25 = 221CFH
- The run length to the BBQ (furthest appliance) is 40 + 5 + 10 + 10 + 5 = 70ft
- Referring to Table 7-20 (Rigid pipe 0.5"WC pressure drop): for a 70ft run, 1" Rigid pipe has a capacity over 221CFH (actual: 240)

SIZING RUN "B"

- Run "B" is sized by the total load of all supplied appliances and the run length from the meter to the furthest appliance
- The total load of the supplied appliances is 36 + 52 + 28 + 25 = 141CFH
- The run length to the BBQ (furthest appliance) is 40 + 5 + 10 + 10 + 5 = 70ft
- Referring to Table 7-20 (Rigid pipe 0.5"WC pressure drop) for a 70ft run, 1" Rigid pipe has a capacity over 141CFH (actual: 240)

SIZING RUN "C"

- Run "C" is sized by the total load of all supplied appliances and the run length from the meter to the furthest appliance
- The total load of all appliances is 52 + 28 + 25 = 105CFH
- The run length to the BBQ (furthest appliance) is 40 + 5 + 10 + 10 + 5 = 70ft
- Referring to Table 7-20 (Rigid pipe 0.5"WC pressure drop): for a 70ft run, 3/4" Rigid pipe has a capacity over 105CFH (actual: 125)

SIZING RUN "D"

- Run "D" is sized by the total load of all supplied appliances and the run length from the meter to the furthest appliance
- The total load of the BBQ and the dryer is 25 + 28 = 53CFH
- The run length to the BBQ (furthest appliance) is 40 + 5 + 10 + 10 + 5 = 70ft
- Referring to Table 7-4 (2.0"WC pressure drop) for a 70ft run, 1/2" CSST has a capacity over 53CFH (actual: 72)

SIZING RUN "E"

- Run "E" is sized by the total load of the supplied appliance and the run length from the meter to the furthest appliance
- The load of the BBQ is 25CFH
- The run length to the BBQ is 40 + 5 + 10 + 10 + 5 = 70ft
- Referring to Table 7-4 (2.0"WC pressure drop) for a 70ft run, 1/2" CSST has a capacity over 25CFH (actual: 72)

SIZING RUN "F"

- Run "F" is sized by the load of the supplied appliance and the run length from the meter to the supplied appliance
- The load of the furnace is 80CFH
- The run length to the furnace is 40 + 10 = 50ft
- Referring to Table 7-20 (Rigid pipe 0.5"WC pressure drop) for a 50ft run, 3/4" Rigid pipe has a capacity over 80CFH (actual: 151)

SIZING RUN "G"

- Run "G" is sized by the load of the supplied appliance and the run length to the supplied appliance
- The load of the water heater is 36CFH
- The run length to the water heater is 40 + 5 + 10 = 55ft
- Referring to Table 7-20 (Rigid pipe 0.5"WC pressure drop) for a 60ft run, 3/8" Rigid pipe has a capacity over 36CFH (actual: 36)

SIZING RUN "H"

- Run "H" is sized by the load of the supplied appliance and the run length to the supplied appliance
- The load of the range is 52CFH
- The run length to the range is 40 + 5 + 10 + 10 = 65ft
- Referring to Table 7-20 (Rigid pipe 0.5"WC pressure drop) for a 70ft run, 1/2" Rigid pipe has a capacity over 52CFH (actual: 61)

SIZING RUN "J"

- Run "J" is sized by the load of the supplied appliance and the run length to the supplied appliance
- The load of the dryer is 28CFH
- The run length to the dryer is 40 + 5 + 10 + 10 + 5 = 70ft
- Referring to Table 7-4 (2.0"WC pressure drop) for a 70ft run, 1/2" CSST has a capacity over 28CFH (actual: 72)

Gastite Division
1116 Vaughn Parkway / Portland, TN 37148
800.662.0208 / www.gastite.com / gastite@gastite.com

3.2.8 Example 7 - Parallel System – 7"WC – Hybrid

Figure 3-15 below shows the same house and similar piping system as Example 2. The piping is arranged in parallel fashion, with individual CSST appliance runs supplied by a main distribution manifold. The main trunk line ("A") from the meter to the distribution manifold is rigid pipe rather than CSST. The utility company's supply pressure (downstream of the meter) is 7"WC. The utility company advises that the specific gravity of the gas delivered will be 0.60 and the energy content is 1 CFH = 1000 BTUH.

The allowable pressure drop across the system has been determined to be 2"WC (supply pressure 7"WC - appliance requirement 5"WC). 0.5"WC pressure drop will be taken over the rigid pipe trunk line and the remaining appliance runs.

Fig. 3-15

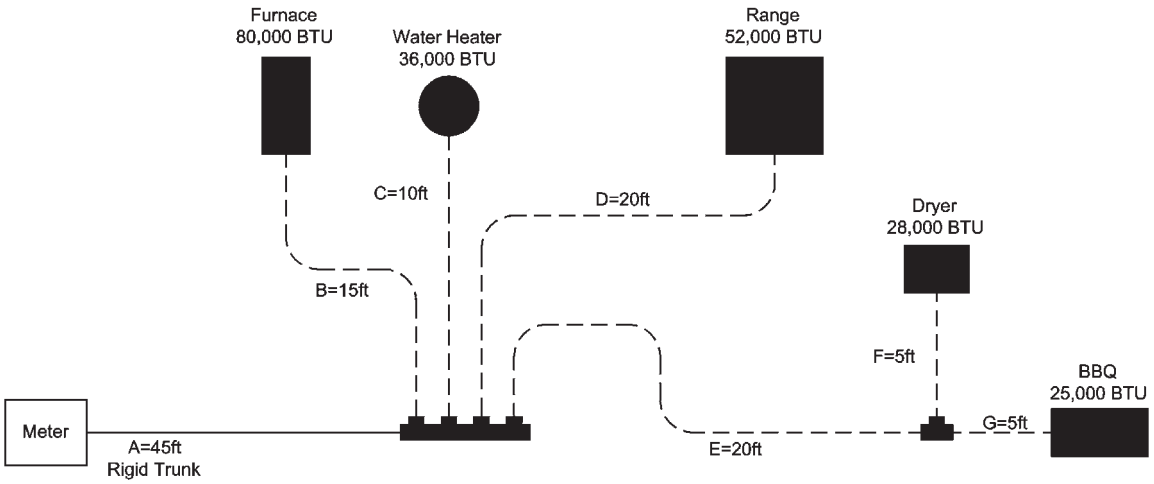

Note: Rigid pipe sized using a 0.5"WC pressure drop table, as no 2.0"WC pressure drop table for rigid pipe is available.

Table 3-8				
Section Description	Load Delivered by Section	Section Length	Run Length	Tube Size
"A" – Rigid Trunk	221 CFH = 221,000 BTUH	45 feet	70feet	1" Rigid
"B" – Furnace	80 CFH = 80,000 BTUH	15 feet	60 feet	3/4" CSST
"C" – Water Heater	36 CFH = 36,000 BTUH	10 feet	55 feet	1/2" CSST
"D" – Range	52 CFH = 52,000 BTUH	20 feet	65 feet	1/2" CSST
"E" – Dryer/BBQ Trunk	53 CFH = 53,000 BTUH	20 feet	70 feet	1/2" CSST
"F" – Dryer	28 CFH = 28,000 BTUH	5 feet	70 feet	1/2" CSST
"G" – BBQ	25 CFH = 25,000 BTUH	5 feet	70 feet	1/2" CSST
Run Length for Trunk Sections = Distance from meter to furthest appliance (Longest Run)				
Run Length for Appliance Sections = Distance from meter to each appliance				

SIZING RUN "A"

- Run "A" is sized by the total load of all appliances and the run length from the meter to the furthest appliance
- The total load of all appliances is 80 + 36 + 52 + 28 + 25 = 221CFH
- The run length to the BBQ (furthest appliance) is 45 + 20 + 5 = 70ft
- Referring to Table 7-20 (Rigid pipe 0.5"WC pressure drop): for a 70ft run, 1" pipe has a capacity over 221CFH (actual: 240)

SIZING RUN "B"

- Run "B" is sized by the load of the supplied appliance and the run length from the meter to the supplied appliance
- The load of the furnace is 80CFH
- The run length to the furnace is 45 + 15 = 60ft
- Referring to Table 7-4 (2.0"WC pressure drop) for a 60ft run, 3/4" CSST has a capacity over 80CFH (actual: 133)

SIZING RUN “C”
- Run “C” is sized by the load of the supplied appliance and the run length from the meter to the supplied appliance
- The load of the water heater is 36CFH
- The run length to the water heater is 45 + 10 = 55ft
- Referring to Table 7-4 (2.0"WC pressure drop) for a 60ft run, 1/2" CSST has a capacity over 36CFH (actual: 78)

SIZING RUN “D”
- Run “D” is sized by the load of the supplied appliance and the run length from the meter to the supplied appliance
- The load of the range is 52CFH
- The run length to the range is 45 + 20 = 65ft
- Referring to Table 7-4 (2.0"WC pressure drop) for a 70ft run, 1/2" CSST has a capacity over 52CFH (actual: 72)

SIZING RUN “E”
- Run “E” is sized by the total load of all supplied appliances and the run length from the meter to the furthest appliance
- The total load of the BBQ and the dryer is 25 + 28 = 53CFH
- The run length to the BBQ (furthest appliance) is 45 + 20 + 5 = 70ft
- Referring to Table 7-4 (2.0"WC pressure drop) for a 70ft run, 1/2" CSST has a capacity over 53CFH (actual: 72)

SIZING RUN “F”
- Run “F” is sized by the load of the supplied appliance and the run length from the meter to the supplied appliance
- The load of the dryer is 28CFH
- The run length to the dryer is 45 + 20 + 5 = 70ft
- Referring to Table 7-4 (2.0"WC pressure drop) for a 70ft run, 1/2" CSST has a capacity over 28CFH (actual: 72)

SIZING RUN “G”
- Run “G” is sized by the total load of the supplied appliance and the run length from the meter to the furthest appliance
- The load of the BBQ is 25CFH
- The run length to the BBQ is 45 + 20 + 5 = 70ft
- Referring to Table 7-4 (2.0"WC pressure drop) for a 70ft run, 1/2" CSST has a capacity over 25CFH (actual: 72)

Gastite Division
1116 Vaughn Parkway / Portland, TN 37148
800.662.0208 / www.gastite.com / gastite@gastite.com

3.2.9 Example 8 - Summation Method for Parallel System – 7"WC – Hybrid

Figure 3-16 below shows the same house as Example 6. The piping is arranged in parallel fashion, with individual CSST appliance runs supplied by a main distribution manifold. The main trunk line ("A") from the meter to the distribution manifold is rigid pipe rather than CSST. The utility company's supply pressure (downstream of the meter) is 7"WC. The utility company advises that the specific gravity of the gas delivered will be 0.60 and the energy content is 1 CFH = 1000 BTUH. The allowable pressure drop across the system has been determined to be 2.0"WC (supply pressure 7"WC - appliance requirement 5"WC).

When using the "Summation Method" for gas pipe sizing, the sum of the pressure losses through each section of pipe should result in a minimum 5"WC pressure delivered to the appliance inlet. (Pressures less than 5"WC may be sufficient for proper appliance operation but should be reviewed with the manufacturer's input rating and the local administrative authority)

Fig. 3-16

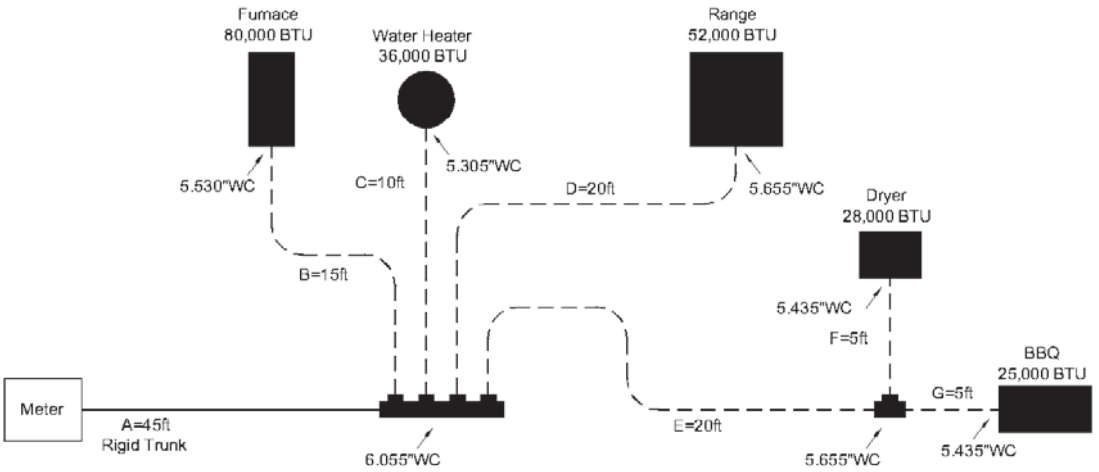

Table 3-9			
Section Description	Load Delivered by Section	Section Length	Tube Size
"A" – Rigid Trunk	221 CFH = 221,000 BTUH	45 feet	3/4" Rigid
"B" – Furnace	80 CFH = 80,000 BTUH	15 feet	1/2" CSST
"C" – Water Heater	36 CFH = 36,000 BTUH	10 feet	3/8" CSST
"D" – Range	52 CFH = 52,000 BTUH	20 feet	1/2" CSST
"E" – Dryer/BBQ Trunk	53 CFH = 53,000 BTUH	20 feet	1/2" CSST
"F" – Dryer	28 CFH = 28,000 BTUH	5 feet	3/8" CSST
"G" – BBQ	25 CFH = 25,000 BTUH	5 feet	3/8" CSST

SIZING RUN "A"

- Run "A" is sized by the total load of all appliances and the section length
- The total load of all appliances is 80 + 36 + 52 + 28 + 25 = 221CFH
- The section length is 45ft
- Referring to Table 7-21 (Pressure drop for Rigid Pipe): for a 225CFH load, 3/4" pipe has a drop of 0.021"WC per ft.
- The pressure drop over Run "A" is: 0.021" x 45ft = 0.945"WC
- The available pressure at the end of run "A" is 7"WC - 0.945"WC = 6.055"WC

SIZING RUN “B”
- Run “B” is sized by the load of the supplied appliance and the section length
- The load of the furnace is 80CFH
- The section length to the furnace is 15ft
- Referring to Table 7-19 (Pressure drop for Gastite® CSST): for a 80CFH load, 1/2" CSST has a drop of 0.035"WC / ft.
- The pressure drop over Run “B” is: 0.035" x 15ft = 0.525"WC
- The available pressure at the end of run “B” is 6.055"WC - 0.525"WC = 5.530"WC

SIZING RUN “C”
- Run “C” is sized by the load of the supplied appliance and the section length
- The load of the water heater is 36CFH
- The section length is 10ft
- Referring to Table 7-19 (Pressure drop for Gastite® CSST): for a 40CFH load, 3/8" CSST has a drop of 0.075"WC / ft.
- The pressure drop over Run “C” is: 0.075" x 10ft = 0.750"WC
- The available pressure at the end of run “C” is 6.055"WC - 0.750"WC = 5.305"WC

SIZING RUN “D”
- Run “D” is sized by the load of the supplied appliance and the section length
- The load of the range is 52CFH
- The section length is 20ft
- Referring to Table 7-19 (Pressure drop for Gastite® CSST): for a 60CFH load, 1/2" CSST has a drop of 0.020"WC / ft.
- The pressure drop over Run “D” is: 0.020" x 20ft = 0.400"WC
- The available pressure at the end of run “D” is 6.055"WC - 0.400"WC = 5.655"WC

SIZING RUN “E”
- Run “E” is sized by the total load of all supplied appliances and the section length
- The total load of the BBQ and the dryer is 25 + 28 = 53CFH
- The section length is 20ft
- Referring to Table 7-19 (Pressure drop for Gastite® CSST): for a 60CFH load, 1/2" CSST has a drop of 0.020"WC / ft.
- The pressure drop over Run “E” is: 0.020" x 20ft = 0.400"WC
- The available pressure at the end of run “E” is 6.055"WC - 0.400"WC = 5.655"WC

SIZING RUN “F”
- Run “F” is sized by the load of the supplied appliance and the section length
- The load of the dryer is 28CFH
- The section length 5ft
- Referring to Table 7-19 (Pressure drop for Gastite® CSST): for a 30CFH load, 3/8" CSST has a drop of 0.044"WC / ft.
- The pressure drop over Run “F” is: 0.044" x 5ft = 0.220"WC
- The available pressure at the end of run “F” is 5.655"WC - 0.220"WC = 5.435"WC

SIZING RUN “G”
- Run “G” is sized by the total load of the supplied appliance and the section length
- The load of the BBQ is 25CFH
- The section length 5ft
- Referring to Table 7-19 (Pressure drop for Gastite® CSST): for a 30CFH load, 3/8" CSST has a drop of 0.044"WC / ft.
- The pressure drop over Run “G” is: 0.044" x 5ft = 0.220"WC
- The available pressure at the end of run “G” is 5.655"WC - 0.220"WC = 5.435"WC

Gastite Division
1116 Vaughn Parkway / Portland, TN 37148
800.662.0208 / www.gastite.com / gastite@gastite.com

3.2.10 Example 9: Summation Method for Series System – 6"WC

Figure 3-17 below shows the same house and piping system as Example 1. The piping is arranged in series with a main run branching at the appliances. The utility company's supply pressure (downstream of the meter) is 6"WC. The utility company advises that the specific gravity of the gas delivered will be 0.60 and the energy content is 1 CFH = 1000 BTUH. The allowable pressure drop across the system has been determined to be 1.0"WC (supply pressure 6"WC - appliance requirement 5"WC).

When using the "Summation Method" for gas pipe sizing, the sum of the pressure losses through each section of pipe should result in a minimum 5"WC pressure delivered to the appliance inlet. (Pressures less than 5"WC may be sufficient for proper appliance operation but should be reviewed with the manufacturer's input rating and the local administrative authority)

Fig. 3-17

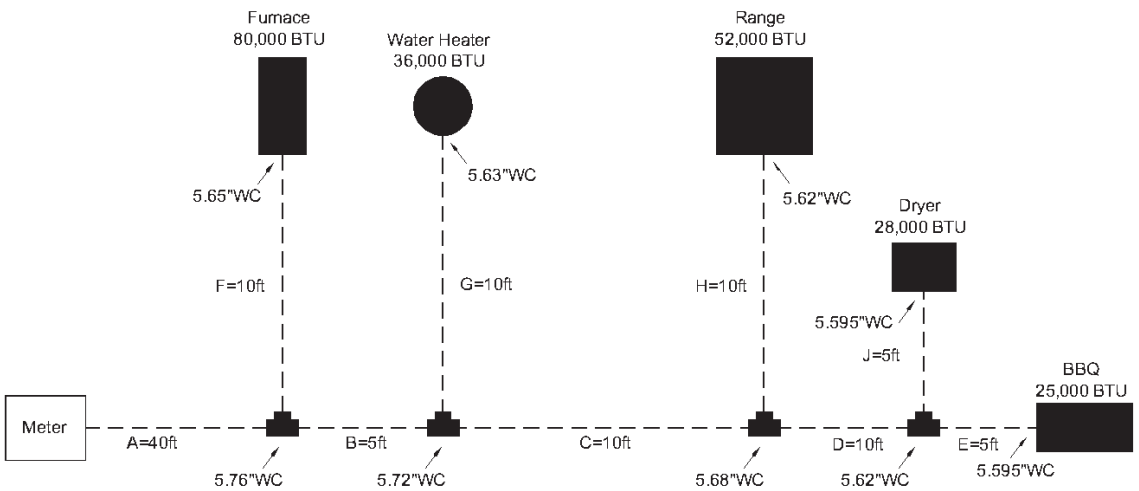

Table 3-10			
Section Description	Load Delivered by Section	Section Length	Tube Size
"A" – Trunk	221 CFH = 221,000 BTUH	40 feet	1-1/4 "CSST
"B" – Trunk	141 CFH = 141,000 BTUH	5 feet	1" CSST
"C" – Trunk	105 CFH = 105,000 BTUH	10 feet	1" CSST
"D" – Trunk	53 CFH = 53,000 BTUH	10 feet	3/4" CSST
"E" – BBQ	25 CFH = 25,000 BTUH	5 feet	1/2" CSST
"F" – Furnace	80 CFH = 80,000 BTUH	10 feet	3/4" CSST
"G" – Water Heater	36 CFH = 36,000 BTUH	10 feet	1/2" CSST
"H" – Range	52 CFH = 52,000 BTUH	10 feet	3/4" CSST
"J" – Dryer	28 CFH = 28,000 BTUH	5 feet	1/2" CSST

SIZING RUN "A"

- Run "A" is sized by the total load of all appliances and the section length
- The total load of all appliances is 80 + 36 + 52 + 28 + 25 = 221CFH
- The section length is 40ft
- Referring to Table 7-19 (Pressure drop for Gastite® CSST): for a 225CFH load, 1-1/4" CSST has a drop of 0.006"WC per ft.
- The pressure drop over Run "A" is: 0.006" x 40ft = 0.240"WC
- The available pressure at the end of run "A" is 6"WC - 0.240"WC = 5.760"WC

SIZING RUN “B”
- Run “B” is sized by the total load of all supplied appliances and the section length
- The total load of the supplied appliances is 36 + 52 + 28 + 25 = 141CFH
- The section length is 5ft
- Referring to Table 7-19 (Pressure drop for Gastite® CSST): for a 150CFH load, 1" CSST has a drop of 0.008"WC per ft.
- The pressure drop over Run “B” is: 0.008" x 5ft = 0.040"WC
- The available pressure at the end of run “B” is 5.760"WC - 0.040"WC = 5.720"WC

SIZING RUN “C”
- Run “C” is sized by the total load of all supplied appliances and the section length
- The total load of the supplied appliances is 52 + 28 + 25 = 105CFH
- The section length is 10ft
- Referring to Table 7-19 (Pressure drop for Gastite® CSST): for a 110CFH load, 1" CSST has a drop of 0.004"WC per ft.
- The pressure drop over Run “C” is: 0.004" x 10ft = 0.040"WC
- The available pressure at the end of run “C” is 5.720"WC - 0.040"WC = 5.680"WC

SIZING RUN “D”
- Run “D” is sized by the total load of all supplied appliances and the section length
- The total load of the BBQ and the dryer is 25 + 28 = 53CFH
- The section length 10ft
- Referring to Table 7-19 (Pressure drop for Gastite® CSST): for a 60CFH load, 3/4" CSST has a drop of 0.006"WC / ft.
- The pressure drop over Run “D” is: 0.006" x 10ft = 0.060"WC
- The available pressure at the end of run “D” is 5.680"WC - 0.060"WC = 5.620"WC

SIZING RUN “E”
- Run “E” is sized by the load of the supplied appliance and the section length
- The load of the BBQ is 25CFH
- The section length is 5ft
- Referring to Table 7-19 (Pressure drop for Gastite® CSST): for a 30CFH load, 1/2" CSST has a drop of 0.005"WC / ft.
- The pressure drop over Run “E” is: 0.005" x 5ft = 0.025"WC
- The available pressure at the end of run “E” is 5.620"WC - 0.025"WC = 5.595"WC

SIZING RUN “F”
- Run “F” is sized by the load of the supplied appliance and the section length
- The load of the furnace is 80CFH
- The section length to the furnace is 10ft
- Referring to Table 7-19 (Pressure drop for Gastite® CSST): for a 80CFH load, 3/4" CSST has a drop of 0.011"WC / ft.
- The pressure drop over Run “F” is: 0.011" x 10ft = 0.110"WC
- The available pressure at the end of run “F” is 5.760"WC - 0.110"WC = 5.650"WC

SIZING RUN “G”
- Run “G” is sized by the load of the supplied appliance and the section length
- The load of the water heater is 36CFH
- The section length to the water heater is 10ft
- Referring to Table 7-19 (Pressure drop for Gastite® CSST): for a 40CFH load, 1/2" CSST has a drop of 0.009"WC / ft.
- The pressure drop over Run “G” is: 0.009" x 10ft = 0.090"WC
- The available pressure at the end of run “G” is 5.720"WC - 0.090"WC = 5.630"WC

Gastite Division
1116 Vaughn Parkway / Portland, TN 37148
800.662.0208 / www.gastite.com / gastite@gastite.com

3.2.10 Example 9: Summation Method for Series System – 6"WC (continued)

SIZING RUN "H"

- Run "H" is sized by the load of the supplied appliance and the section length
- The load of the range is 52CFH
- The section length to the range is 10ft
- Referring to Table 7-19 (Pressure drop for Gastite® CSST): for a 60CFH load, 3/4" CSST has a drop of 0.006"WC / ft.
- The pressure drop over Run "H" is: 0.006" x 10ft = 0.060"WC
- The available pressure at the end of run "H" is 5.680"WC - 0.060"WC = 5.620"WC

SIZING RUN "J"

- Run "J" is sized by the load of the supplied appliance and the section length
- The load of the dryer is 28CFH
- The section length to the dryer is 5ft
- Referring to Table 7-19 (Pressure drop for Gastite® CSST): for a 30CFH load, 1/2" CSST has a drop of 0.005"WC / ft.
- The pressure drop over Run "J" is: 0.005" x 5ft = 0.025"WC
- The available pressure at the end of run "J" is 5.620"WC - 0.025"WC = 5.595"WC

3.2.11 Example 10 - Commercial Elevated Pressure Series System – 2PSI

Figure 3-18 below shows a typical commercial rooftop installation with four (4) appliances. The piping is arranged in series with a main run branching at the appliances. The utility company's supply pressure (downstream of the meter) is 2psi. The utility company advises that the specific gravity of the gas delivered will be 0.60 and the energy content is 1 CFH = 1000 BTUH. The 2psi line pressure chart with a pressure drop of 1psi can be used. This will supply the regulators with the 1psi inlet pressure required for full capacity flow.

Fig. 3-18

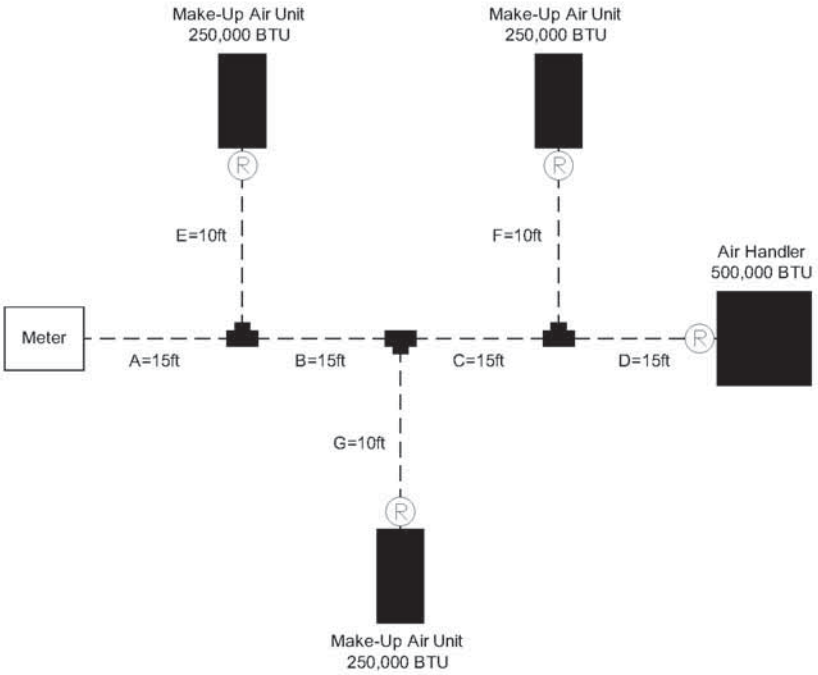

Table 3-11				
Section Description	Load Delivered by Section	Section Length	Run Length	Tube Size
"A" – Trunk	1250 CFH = 1,250,000 BTUH	15 feet	60 feet	1-1/4" CSST
"B" – Trunk	1000 CFH = 1,000,000 BTUH	15 feet	60 feet	1" CSST
"C" – Trunk	750 CFH = 750,000 BTUH	15 feet	60 feet	1" CSST
"D" – Air Handler	500 CFH = 500,000 BTUH	15 feet	60 feet	1" CSST
"E" – Make-Up Air Unit	250 CFH = 250,000 BTUH	10 feet	25 feet	1/2" CSST
"F" – Make-Up Air Unit	250 CFH = 250,000 BTUH	10 feet	55 feet	1/2" CSST
"G" – Make-Up Air Unit	250 CFH = 250,000 BTUH	10 feet	40 feet	1/2" CSST
Run Length for Trunk Sections = Distance from meter to furthest appliance (Longest Run)				
Run Length for Appliance Sections = Distance from meter to each appliance				

SIZING RUN "A"

- Run "A" is sized by the total load of all appliances and the run length from the meter to the furthest appliance
- The total load of all appliances is 250 + 250 + 250 + 500 = 1250CFH
- The run length to the Air Handler (furthest appliance) is 15 + 15 + 15 + 15 = 60ft
- Referring to Table 7-10 (2psi line pressure, 1psi pressure drop): for a 60ft run, 1-1/4" CSST has a capacity over 1250CFH (actual: 1838)

Gastite Division
1116 Vaughn Parkway / Portland, TN 37148
800.662.0208 / www.gastite.com / gastite@gastite.com

SIZING RUN "B"

- Run "B" is sized by the total load of all supplied appliances and the run length from the meter to the furthest appliance
- The total load of the supplied appliances is 250 + 250 + 500 = 1000CFH
- The run length to the Air Handler (furthest appliance) is 15 + 15 + 15 + 15 = 60ft
- Referring to Table 7-10 (2psi line pressure, 1psi pressure drop): for a 60ft run, 1" CSST has a capacity over 1000CFH (actual: 1195)

SIZING RUN "C"

- Run "C" is sized by the total load of all supplied appliances and the run length from the meter to the furthest appliance
- The total load of all appliances is 250 + 500 = 750CFH
- The run length to the Air Handler (furthest appliance) is 15 + 15 + 15 + 15 = 60ft
- Referring to Table 7-10 (2psi line pressure, 1psi pressure drop): for a 60ft run, 1" CSST has a capacity over 750CFH (actual: 1195)

SIZING RUN "D"

- Run "D" is sized by the total load of all supplied appliances and the run length from the meter to the furthest appliance
- The load of the Air Handler is 500CFH
- The run length to the Air Handler (furthest appliance) is 15 + 15 + 15 + 15 = 60ft
- Referring to Table 7-10 (2psi line pressure, 1psi pressure drop): for a 60ft run, 1" CSST has a capacity over 500CFH (actual: 1195)

SIZING RUN "E"

- Run "E" is sized by the total load of the supplied appliance and the run length from the meter to the supplied appliance
- The load of the Make-Up Air Unit is 250CFH
- The run length to the Make-Up Air Unit is 15 + 10 = 25ft
- Referring to Table 7-10 (2psi line pressure, 1psi pressure drop): for a 25ft run, 1/2" CSST has a capacity over 250CFH (actual: 396)

SIZING RUN "F"

- Run "F" is sized by the load of the supplied appliance and the run length from the meter to the supplied appliance
- The load of the Make-Up Air Unit is 250CFH
- The run length to the Make-Up Air Unit is 15 + 15 + 15 + 10 = 55ft
- Referring to Table 7-10 (2psi line pressure, 1psi pressure drop): for a 60ft run, 1/2" CSST has a capacity over 250CFH (actual: 251)

SIZING RUN "G"

- Run "G" is sized by the load of the supplied appliance and the run length from the meter to the supplied appliance
- The load of the Make-Up Air Unit is 250CFH
- The run length to the Make-Up Air Unit is 15 + 15 + 10 = 40ft
- Referring to Table 7-10 (2psi line pressure, 1psi pressure drop): for a 40ft run, 1/2" CSST has a capacity over 250CFH (actual: 310)

3.2.12 Example 11 - Commercial Hybrid System – 7"WC

Figure 3-19 below shows a multi-level apartment building. The piping is arranged in vertical parallel fashion, with individual CSST appliance runs supplied by distribution manifolds. The main trunk line ("A"-"D") from the meter to the distribution manifolds is rigid pipe rather than CSST. The utility company's supply pressure (downstream of the meter) is 7"WC. The utility company advises that the specific gravity of the gas delivered will be 0.60 and the energy content is 1 CFH = 1000 BTUH. The allowable pressure drop across the system has been determined to be 2"WC (supply pressure 7"WC – appliance requirement 5"WC). *Note: Rigid pipe sized using a 0.5"WC pressure drop table as no 2.0"WC pressure drop table for rigid pipe is available.*

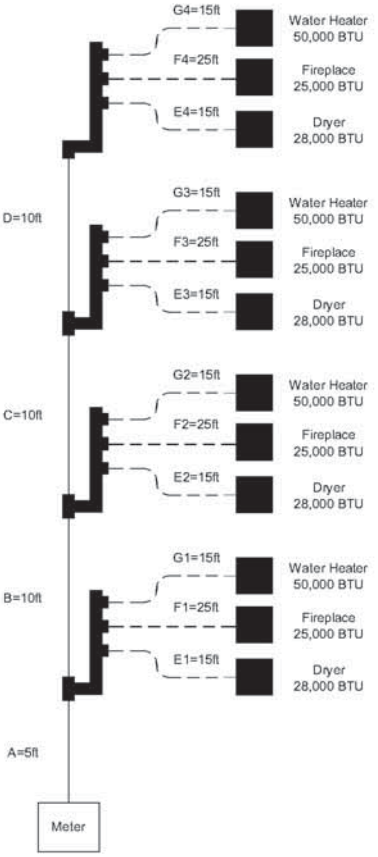

Fig. 3-19

Table 3-12				
Section Description	**Load Delivered by Section**	**Section Length**	**Run Length**	**Tube Size**
"A" – Rigid Trunk	412 CFH = 412,000 BTUH	5 feet	60 feet	1-1/4" Rigid
"B" – Rigid Trunk	309 CFH = 309,000 BTUH	10 feet	60 feet	1-1/4" Rigid
"C" – Rigid Trunk	206 CFH = 206,000 BTUH	10 feet	60 feet	1" Rigid
"D" – Rigid Trunk	103 CFH = 103,000 BTUH	10 feet	60 feet	3/4" Rigid
"E1" – Dryer	28 CFH = 28,000 BTUH	20 feet	20 feet	3/8" CSST
"F1" – Fireplace	25 CFH = 25,000 BTUH	25 feet	30 feet	1/2" CSST
"G1" – Water Heater	50 CFH = 50,000 BTUH	15 feet	20 feet	1/2" CSST
"E2" – Dryer	28 CFH = 28,000 BTUH	15 feet	30 feet	3/8" CSST
"F2" – Fireplace	25 CFH = 25,000 BTUH	25 feet	40 feet	1/2" CSST
"G2" – Water Heater	50 CFH = 50,000 BTUH	15 feet	30 feet	1/2" CSST
"E3" – Dryer	28 CFH = 28,000 BTUH	15 feet	40 feet	3/8" CSST
"F3" – Fireplace	25 CFH = 25,000 BTUH	25 feet	50 feet	1/2" CSST
"G3" – Water Heater	50 CFH = 50,000 BTUH	15 feet	40 feet	1/2" CSST
"E4" – Dryer	28 CFH = 28,000 BTUH	15 feet	50 feet	3/8" CSST
"F4" – Fireplace	25 CFH = 25,000 BTUH	25 feet	60 feet	1/2" CSST
"G4" – Water Heater	50 CFH = 50,000 BTUH	15 feet	50 feet	1/2" CSST
Run Length for Trunk Sections = Distance from meter to furthest appliance (Longest Run)				
Run Length for Appliance Sections = Distance from meter to each appliance				

SIZING RUN "A"

- Run "A" is sized by the total load of all appliances and the run length from the meter to the furthest appliance
- The total load of all appliances is 4 x (50 + 25 + 28) = 412CFH
- The run length to the 4th floor Fireplace (furthest appliance) is 5 + 10 + 10 + 10 + 25 = 60ft
- Referring to Table 7-20 (Rigid pipe 0.5"WC pressure drop): for a 60ft run, 1-1/4" pipe has a capacity over 412CF (actual: 530)

SIZING RUN "B"

- Run "B" is sized by the load of the supplied appliances and the run length from the meter to the furthest appliance
- The total load of the supplied appliances is 3 x (50 + 25 + 28) = 309CFH
- The run length to the 4th floor Fireplace (furthest appliance) is 5 + 10 + 10 + 10 + 25 = 60ft
- Referring to Table 7-20 (Rigid pipe 0.5"WC pressure drop): for a 60ft run, 1-1/4" pipe has a capacity over 309CF (actual: 530)

Gastite Division
1116 Vaughn Parkway / Portland, TN 37148
800.662.0208 / www.gastite.com / gastite@gastite.com

SIZING RUN "C"
- Run "C" is sized by the load of the supplied appliances and the run length from the meter to the furthest appliance
- The total load of the supplied appliances is 2 x (50 + 25 + 28) = 206CFH
- The run length to the 4th floor Fireplace (furthest appliance) is 5 + 10 + 10 + 10 + 25 = 60ft
- Referring to Table 7-20 (Rigid pipe 0.5"WC pressure drop): for a 60ft run, 1" pipe has a capacity over 206CFH (actual: 260)

SIZING RUN "D"
- Run "D" is sized by the load of the supplied appliances and the run length from the meter to the furthest appliance
- The total load of the supplied appliances is 50 + 25 + 28 = 103CFH
- The run length to the 4th floor Fireplace (furthest appliance) is 5 + 10 + 10 + 10 + 25 = 60ft
- Referring to Table 7-20 (Rigid pipe 0.5"WC pressure drop): for a 60ft run, 3/4" pipe has a capacity over 103CFH (actual: 138)

Sizing Runs E1, F1, G1, E2, F2 and G2 are similar to the sizing of E3, F3 and G3.

SIZING RUN "E3"
- Run "E3" is sized by the load of the supplied appliances and the run length from the meter to the supplied appliance
- The load of the dryer is 28CFH
- The run length to the dryer is 5 + 10 + 10 + 15 = 40ft
- Referring to Table 7-4 (2"WC pressure drop) for a 40ft run, 3/8" CSST has a capacity of 28CFH(actual: 32)

SIZING RUN "F3"
- Run "F3" is sized by the load of the supplied appliances and the run length from the meter to the supplied appliance
- The load of the fireplace is 25CFH
- The run length to the fireplace is 5 + 10 + 10 + 25 = 50ft
- Referring to Table 7-4 (2"WC pressure drop) for a 50ft run, 3/8" CSST has a capacity 25CFH (Check against fireplace sizing)
- Referring to Table 4-6 (Fireplace Sizing), 1/2" CSST has a capacity over 25CFH (actual: 74)
- Using the larger result, this run will be sized to 1/2" CSST

SIZING RUN "G3"
- Run "G3" is sized by the load of the supplied appliances and the run length from the meter to the supplied appliance
- The load of the water heater is 50CFH
- The run length to the water heater is 5 + 10 + 10 + 15 = 40ft
- Referring to Table 7-4 (2"WC pressure drop) for a 40ft run, 1/2" CSST has a capacity over 50CFH (actual: 95)

SIZING RUN "E4"
- Run "E4" is sized by the load of the supplied appliances and the run length from the meter to the supplied appliance
- The load of the dryer is 28CFH
- The run length to the dryer is 5 + 10 + 10 + 10 + 15 = 50ft
- Referring to Table 7-4 (2"WC pressure drop) for a 50ft run, 3/8" CSST has a capacity of 28CFH (actual: 28)

3.2.12 Example 11 - Commercial Hybrid System – 7"WC (continued)

SIZING RUN "F4"

- Run "F4" is sized by the load of the supplied appliances and the run length from the meter to the supplied appliance
- The load of the fireplace is 25CFH
- The run length to the fireplace is 5 + 10 + 10 + 10 + 25 = 60ft
- Referring to Table 7-4 (2"WC pressure drop) for a 60ft run, 3/8" CSST has a capacity over 25CFH (Check against fireplace sizing)
- Referring to Table 4-6 (Fireplace Sizing), 1/2" CSST has a capacity over 25CFH (actual: 67)
- Using the larger result, this run will be sized to 1/2" CSST

SIZING RUN "G4"

- Run "G4" is sized by the load of the supplied appliances and the run length from the meter to the supplied appliance
- The load of the water heater is 50CFH
- The run length to the water heater is 5 + 10 + 10 + 10 + 15 = 50ft
- Referring to Table 7-4 (2"WC pressure drop) for a 50ft run, 1/2" CSST has a capacity over 50CFH (actual: 85)

Gastite Division
1116 Vaughn Parkway / Portland, TN 37148
800.662.0208 / www.gastite.com / gastite@gastite.com

Section 4.0 Installation Practices

4.1 General Provisions

a) Precautions must be taken to ensure any exposed Gastite®/FlashShield™ CSST is not damaged or abused during building construction. All tubing, fittings and hardware should be stored in a clean, dry location prior to installation.

b) Open ends of the tubing are to be temporarily plugged or taped closed prior to installation to prevent entrance of dirt, dust or other debris.

c) The protective plastic jacketing should be kept in place as much as possible to protect the tubing from corrosive threats. Contact with chemicals containing chlorides must be followed by a thorough rinse and wipe dry. This includes fluxes used to solder copper tubing and acid based cleaners used to wash masonry.

d) Protect tubing from contact with sharp objects.

e) Avoid stressing the tubing or fittings with tight bends, kinks, twists, stretching or repetitive bending. Refer to Table 4-1 below for the recommended minimum bend radius for Gastite®/FlashShield™ CSST (Fig. 4-1).

Table 4-1			
Bend Radius			
Gastite®/ FlashShield™ Size	EHD	Absolute Min. Bend Radius	Suggested Bend Radius
3/8"	13	3/4"	3.0"
1/2"	18	3/4"	3.0"
3/4"	23	1.0"	3.0"
1"	31	3.0"	5.0"
1-1/4"	37	3.0"	5.0"
1-1/2"	47	3.0"	5.0"
2"	60	4.0"	6.0"

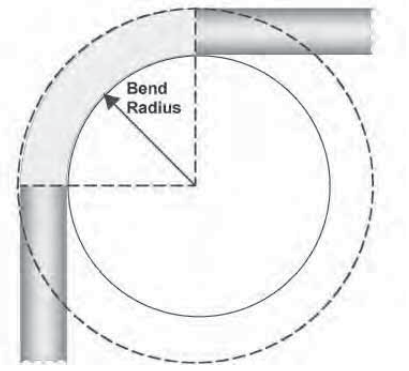

Fig. 4-1

f) Supporting Gastite®/FlashShield™ CSST - Tubing shall be supported in a workmanlike manner with pipe straps, bands or hangers suitable for the size and weight of the tubing, at intervals not to exceed those shown in Table 4-3. A proper support is one which is designed as a pipe hanger, does not damage the tubing during installation, and provides full support. "J" Hooks may not be used as they may damage the Gastite®/FlashShield™ CSST. Zip ties/cable ties are not to be used as a primary support but may be used to organize or bundle Gastite®/FlashShield™ CSST. See Table 4-5 for supporting Gastite®/FlashShield™ CSST in a rooftop application.

When supporting Gastite® CSST tubing runs, the use of other conductive metallic systems such as metallic appliance vents, metallic ducting and piping, and electrical cables must be avoided.

When supporting FlashShield™ tubing runs, contact with other conductive metallic systems is acceptable.

g) Gastite®/FlashShield™ CSST must be rigidly terminated with a Gastite® or FlashShield™ fitting. This can be achieved by terminating with a rigidly mounted fitting or by terminating with a fitting threaded onto a rigid gas-piping component.

4.2 Field Fitting Assembly Procedure

4.2.1 Gastite Field Fitting Assembly

Step 1

Cut-to-Length (Fig. 4-2)

Cut tubing to the desired length leaving approximately one inch for fitting attachment. Cut should be centered between two corrugations. Use light roller pressure with extra rotations in one direction to leave tubing round and free of burrs. Note: To ensure a quality flare, all cuts should be made on a straight section of tubing.

Fig. 4-2

Step 2

Strip Jacket (Fig. 4-3)

Using a utility knife, strip jacket back to the valley of the second corrugation.
Do not cut the jacket in such a way that the sealing surface of the tubing is scored. The short piece of jacket can easily be removed by placing the utility knife blade under the jacket to peel the jacket off.
Caution: Tube ends are sharp, use care when handling.

Fig. 4-3

Step 3

Install Nut and Bushings (Fig. 4-4)

Thread fitting body into appliance. Slide nut over tubing. Separate bushings and position, as shown in Figure 4-6, into the valley of the first corrugation leaving one corrugation exposed between the end of the bushing and tubing.

At this point, the bushings will begin to capture the jacket for a contaminant resistant seal (Fig. 4-5).

Fig. 4-4

NOTE:

- It is important to know that the jacket locking feature of the Jacket-Lock fitting is not required to produce a gas-tight seal between the fitting and the tubing (Fig. 4-6).
- Pipe dope or sealant must not be used inside the fitting prior to assembly.

Fig. 4-5

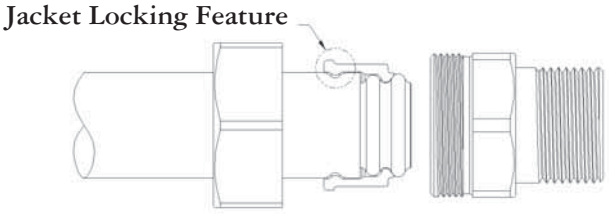

Fig. 4-6

Gastite Division
1116 Vaughn Parkway / Portland, TN 37148
800.662.0208 / www.gastite.com / gastite@gastite.com

Step 4

Position Bushings (Fig. 4-7)

Insert bushings into fitting body. A small amount of resistance indicates the bushings are being compressed to further capture the jacket. Note: The piloting feature of the bushings ensures the tubing is aligned properly with the fitting body for a uniform flare and a gas tight seal.

Fig. 4-7

Step 5

Wrench Fitting (Fig. 4-8)

Slide nut over bushings and thread onto fitting body. Some resistance will be experienced as the nut begins to compress the tubing and create the double wall flare.

Continue to thread the nut until resistance to wrenching increases greatly and the double wall flare is tightly seated.

Note: During the tightening process rotate the nut only. Do not rotate the fitting body.

Any portions of the exposed stainless steel tubing shall be wrapped with tape or sleeved to prevent threats by acids or chloride based cleaning solutions for masonry. Self-bonding silicone tape is recommended here for durability.

Fig. 4-8

4.2.2 FlashShield Field Fitting Assembly

Step 1

Cut-to-Length (Fig. 4-9)

Cut tubing to the desired length leaving approximately one inch for fitting attachment. Cut should be centered between two corrugations. Use light roller pressure with extra rotations in one direction to leave tubing round and free of burrs. Note: To ensure a quality flare, all cuts should be made on a straight section of tubing.

Fig. 4-9

Step 2

Strip Jacket (Fig. 4-10, Fig. 4-11)

Using a utility knife, strip jacket back to the valley of the second corrugation.
Do not cut the jacket in such a way that the sealing surface of the tubing is scored. The short piece of jacket can easily be removed by placing the utility knife blade under the jacket to peel the jacket off.
Caution: Tube ends are sharp, use care when handling.

Fig. 4-10

Step 3

Install Nut and Bushings (Fig. 4-12)

Thread fitting body into appliance. Slide nut over tubing. Separate bushings and position, as shown in Figure 4-13, into the valley of the first corrugation leaving one corrugation exposed between the end of the bushing and tubing.

Fig. 4-11

NOTE:

- Foil biting feature must be utilized with FlashShield.
- Pipe dope or sealant must not be used inside the fitting prior to assembly.

Fig. 4-12

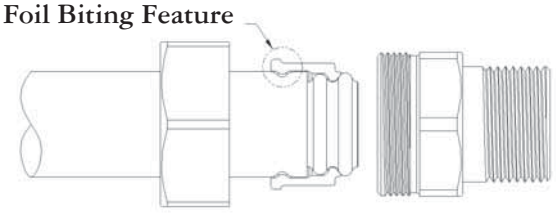

Fig. 4-13

Gastite Division
1116 Vaughn Parkway / Portland, TN 37148
800.662.0208 / www.gastite.com / gastite@gastite.com

Step 4

Position Bushings (Fig. 4-14)

Insert bushings into fitting body. A small amount of resistance indicates the bushings are being compressed to further capture the jacket. Note: The piloting feature of the bushings ensures the tubing is aligned properly with the fitting body for a uniform flare and a gas tight seal.

Fig. 4-14

Step 5

Wrench Fitting (Fig. 4-15)

Slide nut over bushings and thread onto fitting body. Some resistance will be experienced as the nut begins to compress the tubing and create the double wall flare.

Continue to thread the nut until resistance to wrenching increases greatly and the double wall flare is tightly seated.

Note: During the tightening process rotate the nut only. Do not rotate the fitting body.

Fig. 4-15

Gastite®/FlashShield™ Termination Fitting Assembly

1. Remove flange from brass fitting assembly.
2. Slide flange over tubing.
3. Attach brass fitting to tubing. (Steps 2 - 5)
4. Thread flange back onto fitting assembly.
5. Mount completed termination assembly.

Table 4-2

Gastite®/FlashShield™ Recommended Torque Values

Size	EHD	*Torque
3/8"	13	25 ft-lbs
1/2"	18	35 ft-lbs
3/4"	23	45 ft-lbs
1"	31	65 ft-lbs
1-1/4"	37	95 ft-lbs
1-1/2"	47	120 ft-lbs
2"	60	150 ft-lbs

* Fitting is factory lubricated to reduce field torque requirements. Lubrication must be chloride free.

* Minimum torque values supplied for lab testing reference only. Field installation requirements: system must pass pressure/leak test (See Section 6).

Term Bracket Fitting (Fig. 4-16 through Fig. 4-19)

1. Attach Bracket to stud or mounting surface.
2. Slide Jam-Nut over tubing and route tubing through Bracket.
3. Attach XR2-Fitting to tubing.
4. Slide the XR2-Fitting back onto Bracket and thread Jam-Nut.

Step 1: Fig. 4-16

Step 2: Fig 4-17

Step 3: Fig 4-18

Step 4: Fig 4-19

XROUTLETBOX (Fig. 4-20 through Fig. 4-24)

1. Mount Box and Bracket to stud or mounting surface.
2. Slide Jam-Nut over tubing and route tubing through Bracket and Box.
3. Attach Fitting to tubing.
4. Secure Jam-Nut to Fitting.
5. Attach Ball-Valve.

Step 1: Fig. 4-20

Step : Fig. 4-21

Step 3: Fig. 4-22

Step 4: Fig. 4-23

Step 5: Fig. 4-24

Note: Strike Protection (Floppy) not shown for clarity.

ANGLE STUB-OUT (Fig. 4-25 through Fig. 4-27)

1. Attach XR2 female fitting to short end of Stub-Out.
2. Insert long end of Angle Stub-Out through metal insert knockout.
3. Secure Stub-Out utilizing sheet metal screws at the four mounting points.
4. Insert CSST into the female fitting and complete fitting assembly.
5. Refer to Section 4.6.4 (g).

Fig 4-27

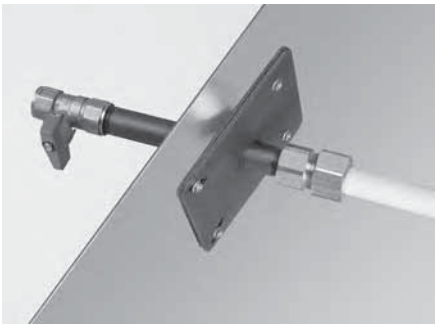

Fig 4-26

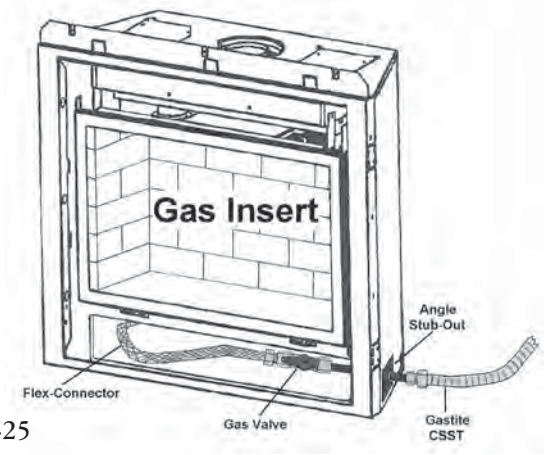

Fig 4-25

Gastite Division
1116 Vaughn Parkway / Portland, TN 37148
800.662.0208 / www.gastite.com / gastite@gastite.com

4.3 Routing

4.3.1 Vertical Runs

Vertical runs are the preferred run method. Tubing runs should be relatively plumb and free to move within the wall cavity without any physical support between the floors. For support requirements refer to Section 4.1.f. Where any run is greater than two stories or 20-ft, additional support (appropriate to the weight of the tubing) must be provided at the point of penetration through the floor.

Care should be taken when installing vertical runs to maintain as much separation as reasonably possible from other electrically conductive systems in the building.

There is no requirement to maintain separation from other electrically conductive systems when routing FlashShield™

4.3.2 Horizontal Runs

Tubing routed on top of ceiling joists and other structural members which comply with the horizontal support spacing requirements will be considered sufficiently supported . See Figures 4-28, 4-29, 4-30 and 4-31 for examples of acceptable support configurations when routing Gastite®/FlashShield™. Gastite®/FlashShield™ may be routed beneath, through and alongside floor and ceiling joists. Due consideration must be given to future construction possibilities. Horizontal runs in concealed areas must conform to Section 4.4 Protection.

Care should be taken when installing horizontal runs to maintain as much separation as reasonably possible from other electrically conductive systems in the building.

There is no requirement to maintain separation from other electrically conductive systems when routing FlashShield™.

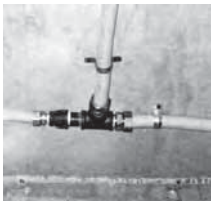

Fig 4-28

Fig 4-29

Fig 4-30

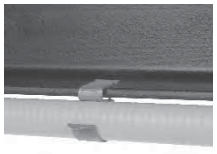

Fig 4-31

Table 4-3		
Support Spacing (Non-Rooftop, Non-Wall Cavity)		
Gastite®/ FlashShield™ Size	EHD	Vertical or Horizontal
3/8"	13	4 Feet
1/2"	18	6 Feet
3/4"	23	8 feet (USA) 6 feet (Canada)
1"	31	8 feet (USA) 6 feet (Canada)
1-1/4"	37	8 feet (USA) 6 feet (Canada)
1-1/2"	47	8 feet (USA) 6 feet (Canada)
2"	60	8 feet (USA) 6 feet (Canada)

Table 4-4	
Gastite®/FlashShield™ Clearance Holes	
Gastite®/ FlashShield™ Size	Drill Hole Size (min)
3/8"	1"
1/2"	1-1/4"
3/4"	1-1/2"
1"	1-3/4"
1-1/4"	2"
1-1/2"	2-1/4"
2"	3"

4.3.3 Installation Clearance Holes

Clearance holes for routing Gastite®/FlashShield™ CSST are to be approximately 1/2 inch greater than the O.D. of the Gastite®/FlashShield™ CSST. Drilling of any structural member must be in conformance with the local building code. Refer to Table 4-4 for the recommended drill hole sizing.

4.3.4 Concealed Fittings

The Gastite®/FlashShield™ Mechanical Fittings have been tested and listed per the requirements of ANSI LC-1 for concealed use. The fitting may be used for concealed attachment including, but not limited to: appliance valves, branch runs using tee fittings, length splices and stub-outs manufactured from approved fuel gas piping materials.

These guidelines address some of the most common situations where concealing the fittings is the only practical alternative. These guidelines cannot address all applications of concealed fittings, but instead, provide typical instructions to demonstrate the principles that apply to fittings listed for installation in concealed locations. (Reference National Fuel Gas Code, NFPA 54, Concealed Piping in Buildings).

a) New Installations (Fig. 4-32) – When multiple gas outlets are supplied from a single run of Gastite®/FlashShield™ CSST, each downstream outlet branch can be connected to the main run using a tee-type fitting which can be located in a concealed location.
b) Fireplace key valves (Fig. 4-33) – Gastite®/FlashShield™ CSST connections to fireplace key valves can be located in a concealed location when accessibility is not readily provided.
c) Stub-outs (Fig. 4-34) – Gastite®/FlashShield™CSST connections to stub-outs fabricated from approved fuel gas piping materials.
d) Exclusion – Manifold stations for dual pressure systems which include the multi-port manifold, shut-off valve and pressure regulator shall not be installed in concealed locations regardless of the qualifications of the tubing.

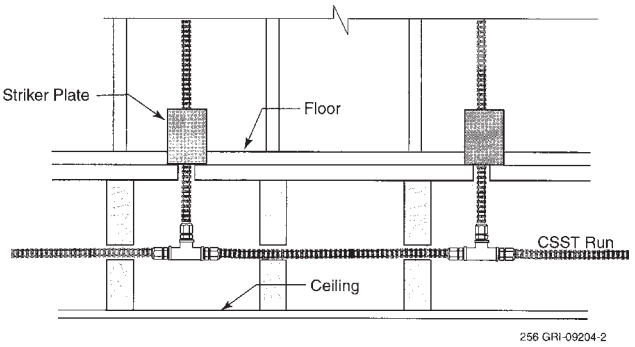

Fig 4-32

Fig 4-33
Note: Strike Protection (Floppy) not shown for clarity.

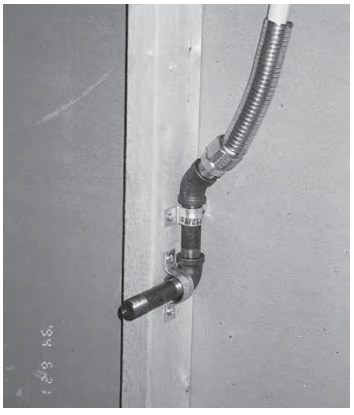

Fig 4-34

4.3.5 Modifications to Existing Systems

a) New Ceilings in Unfinished Rooms/Basements – Gastite®/FlashShield™ CSST fittings originally installed in accessible ceiling locations can be concealed in the event a ceiling is installed at a later date.
b) Extensions to Existing Tubing Runs – Concealed tubing can be modified to permit an extension to another appliance location provided there is sufficient capacity to supply both appliances at the same time. If an accessible location for the modification is not available, the existing tubing run can be modified with a tee fitting that will result in a concealed fitting behind the wallboard.
c) When modifications lead to concealed tubing, strike protection may be required. Refer to section 4.4.

Gastite Division
1116 Vaughn Parkway / Portland, TN 37148
800.662.0208 / www.gastite.com / gastite@gastite.com

4.3.6 Outdoor

Gastite®/FlashShield™ Flexible Gas Tubing has passed all requirements of ANSI LC1, which include testing for suitability for exposure of CSST piping systems to outdoor environments.

a) Outdoors – When installed outdoors, the external jacketing shall remain intact as much as practical for the given installation. Any portions of the exposed stainless steel tubing shall be wrapped with tape or sleeved to prevent later threats by acid or chloride based cleaning solutions for masonry. Self-bonding silicone tape is recommended here for durability.

b) Along side a structure – When installed along the outside of a structure (between the ground and a height of 6 ft.) in an exposed condition, the Gastite®/FlashShield™ CSST shall be protected from mechanical damage inside a conduit or chase. A conduit or chase is not required if the tubing is installed in a location that will not subject the Gastite®/FlashShield™ CSST to mechanical damage.

4.3.7 Fire Rated Construction

The Gastite® plastic jacket on the steel tubing has a maximum ASTM E84 rating of 15 for flame spread, and 30 for smoke density. These values meet most typical requirements for building construction. Therefore, the jacket should remain intact when passing through typical building constructions such as plenums, floor and ceiling joists, rim joists, walls or other fire rated resistance construction limited to materials of ASTM E84 ratings of 25 flame and 50 smoke, or lower.

The FlashShield jacket has a maximum ASTM E84 rating of 5 for flame spread and 30 for smoke density. These values meet most typical requirements for building construction. Therefore, the jacket should remain intact when passing though typical building construction such as plenums, floor and ceiling joists, rim joists, walls, and other fire rated resistance construction limited to materials of ASTM E84 ratings of 25 flame and 50 smoke or lower.

A plenum is defined as an enclosed portion of the building structure that is designed to allow air movement, and thereby serve as part of an air distribution system. (See definition of Plenum, Section 8.0.) No gas tubing may be run within ductwork.

For tubing passing through a UL classified fire rated construction, UL Classified Systems for "Through-Penetration Firestop Systems (XHEZ)" may be found in UL Fire Resistance Volume 2. In instances that UL specifications for fire rated construction conflict with the current Gastite Design and Installation Guide, UL takes precedence.

UL Through-Penetration Firestop System information is available on the Gastite® Web site at www.gastite.com.

4.3.8 Routing Through Masonry Material

"Masonry material" includes but is not limited to brick, concrete, mortar, and stucco. The term "through masonry construction" refers to any enclosed/concealed construction spaces where CSST is routed in close proximity to masonry but does not apply to exposed CSST mounted to a set masonry surface.

When it is necessary to install Gastite®/FlashShield through masonry materials the tubing shall be routed through a conduit that is a ½" larger in diameter (to ease routing) than the OD of the CSST and appropriate for the application. The sleeve must maintain a continuous watertight barrier between the masonry material and the CSST, up to or past the edge of the masonry hole.

Masonry encasement refers to any enclosed/concealed construction within "masonry material" that produces distributed loads. For masonry encasement see Underground Installations (section 4.9).

4.3.9 Installation Within a Chimney Chase

Gastite tubing shall not be installed within a chase and/or enclosure that includes a metallic appliance vent and/or metallic chimney liner that protrudes through and/or past the roof unless:

- Permitted by local building code,
- An express separation distance as required by local code can be achieved along the entire length,
- The vent and/or liner is directly bonded to the grounding electrode system, AND
- There is no physical contact between the metallic vent and/or liner and the Gastite tubing along the entire length of the vent.

FlashShield™ CSST may be routed within a chimney chase, the restrictions of section 4.3.9 (Installation within a chase) do not apply.

4.4 Strike Protection

Concealed Gastite®/FlashShield™ CSST should be routed in areas that will minimize the opportunity for physical damage and/or installed in areas where the tubing will be free to move to avoid a potential puncture threat. The tube can be considered free to move when there is at least the tube's outside diameter of clearance on all sides of the tubing. (Fig. 4-36)

Gastite®/FlashShield™ CSST installed in locations subject to physical damage shall be adequately protected. The tubing shall be protected at points of support and when passing through structural members such as studs, joists and plates. Where all three of the following conditions exist mechanical strike protection must be used.

1. **Concealed** – View is obstructed by walls, and structural members.
2. **Constrained** – Tubing is not free to move to avoid puncture threats.
3. **Within 3 inches of a potential threat** – Tubing is routed in locations which are within 3 inches of drills, screws, or nails.

4.4.1 Strike Plates

For Gastite®/FlashShield™ CSST which meets all three of the conditions above, the required method for protecting concealed tubing is hardened steel striker plates listed for use with corrugated stainless steel tubing systems. Striker plates are used at all points of penetration through studs, joists, plates or similar structures (Figures 4-35, 4-37, 4-38, 4-39 and 4-40). Striker plates other than those provided or specified by Gastite are strictly prohibited.

The extent of protection shall be defined as follows:

a) At concealed support points and points of penetration less than 2 inches from any edge of a stud, joist, plate, etc., a listed striker plate is required at the area of support to provide coverage for 5 inches from the point of restraint in one or both directions.

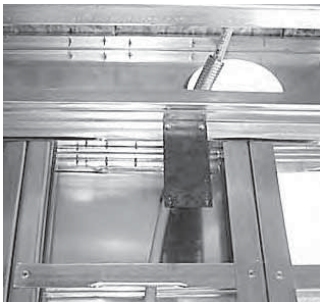

Fig 4-35

Note: Steel Stud Construction – Knock teeth off striker plate for steel stud construction. Floppy at corners aids pull-through.

Fig 4-36

Fig. 4-37

Fig. 4-38

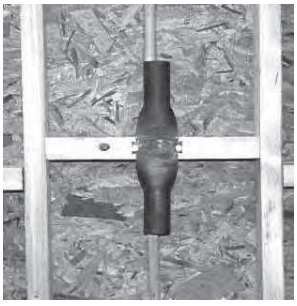

Fig. 4-39

Fig. 4-40

Gastite Division
1116 Vaughn Parkway / Portland, TN 37148
800.662.0208 / www.gastite.com / gastite@gastite.com

b) At concealed support points and points of penetration 2 to 3 inches from any edge of a stud, joist plate, etc., listed 1/4 striker plates are required to provide protection throughout the area of penetration (Fig. 4-41 and 4-42).

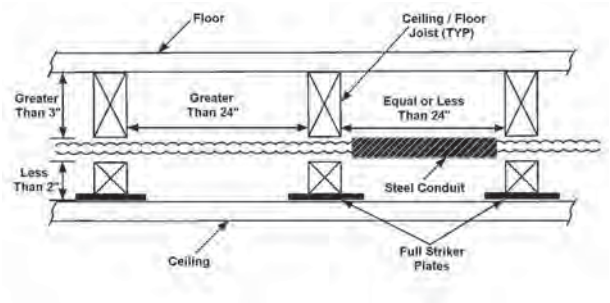

Fig. 4-41

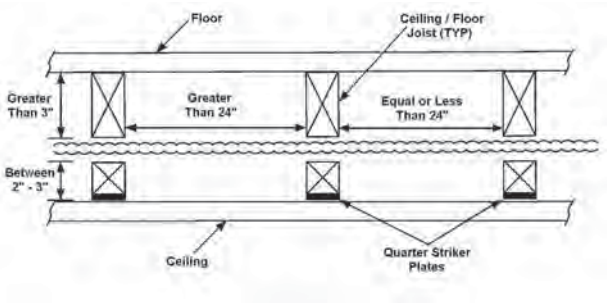

Fig. 4-42

c) When multiple runs are located between the same two studs such as manifold runs or meter bank runs, a 6" x 17" panel type striker plate may be used as an alternate to individual striker plates for each tubing run (Fig. 4-44).

Fig. 4-43

Fig. 4-44

d) When installed inside insulated exterior walls, tubing shall be routed between the face of the insulation and the interior wall surface (Fig. 4-45). If rigid insulation is used, enough space must be provided for movement of the tubing (see Section 4.4) or heavy wall conduit must run over the length of the restrained area.

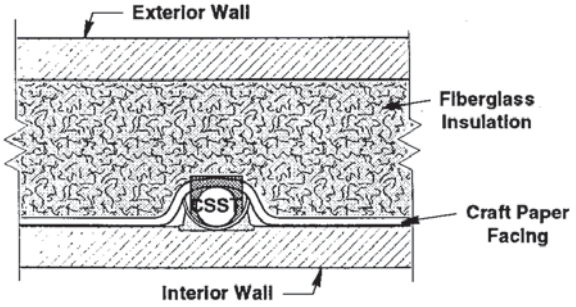

Fig. 4-45

e) At points of penetration greater than 3 inches from any edge of stud, joist, plate, etc., no protection is required.

f) Tubing routed horizontally through structural members shall be protected from puncture threats with the appropriate shielding material (Figure 4-41 and 4-42). At penetration points, listed plates of the appropriate size shall be utilized. Tubing between constraints that are less than 24 inches apart and meeting the criteria requiring full striker plates, shall be additionally protected by Steel Conduit (Fig. 4-43).

g) Gastite®/FlashShield™ CSST greater than 1" nominal diameter installed within a concealed hollow wall cavity of 2"x4" construction shall be protected along the entire concealed run length with Steel Conduit (see Section 4.4.2).

h) The width of installed striker plates shall be at least 1.5 times the outside diameter of the Gastite®/FlashShield™ CSST.

4.4.2 Steel Conduit

At termination points not covered by the ANSI standard, floppy steel conduit (heavy wall) shall be installed as additional protection (Fig. 4-46 and 4-47). Gastite®/FlashShield™ requires a minimum of six inches of conduit and supplies precut conduit in one foot lengths. Floppy Steel conduit should not be used in place of hardened steel striker plates when passing through structural members.

Fig. 4-46

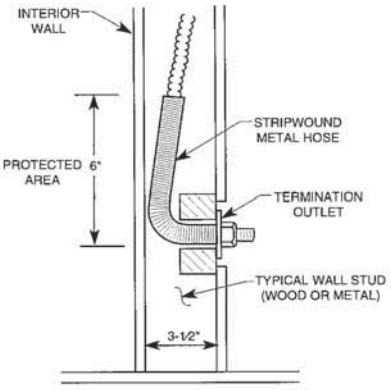

Fig. 4-47

4.5 Meter

The gas piping for the meter stub-out is usually subject to local requirements such as size, location, and material type. It is always important to confirm local code and utility requirements. Gastite®/FlashShield recommends the use of 1/2" CSST or greater as the minimum trunk line size. Size 3/8" should not be used for trunk lines. This will allow for the addition of future gas appliances and minimize the opportunity for whistling.

a) Unsupported Meters – Meters that depend on the service supply line and/or the house piping for support shall not be directly connected to the Gastite®/FlashShield™ CSST. As shown in the Figures 4-48 and 4-49, a rigid connection point is created using a Gastite®/FlashShield™ termination fitting, Gastite® designed stub-out or rigid pipe components.

Fig. 4-48

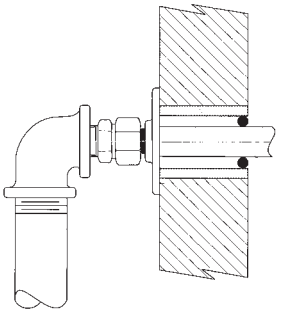

Fig. 4-49

b) Self-Supported Meters – Meters that are independently supported with a bracket can be directly connected to the Gastite®/FlashShield™ CSST as shown in Figure 4-51. If practical, direct Gastite®/FlashShield™ CSST connections shall include a 3 to 6 inch loop of tubing (as shown) to accommodate differential settling and meter movement. No mechanical protection of the tubing is required for outdoor meter connections; however, ensure that the local utility supports this practice as some utilities have regulations specifying meter attachments. Ensure that any exposed sections (jacket removed) of the stainless tubing at the fitting are wrapped with tape. This is especially important with masonry constructions.

Fig. 4-50

c) Electrical bonding connections made at the gas meter must comply with section 4.10 of this guide.

Gastite Division
1116 Vaughn Parkway / Portland, TN 37148
800.662.0208 / www.gastite.com / gastite@gastite.com

4.6 Appliance

4.6.1 Moveable Appliance

a) For use with movable appliances, Gastite®/FlashShield™ must be rigidly terminated before the appliance connection. This fixed connection point allows for the attachment of flexible appliance connectors, drip legs (if required), and shut off valves to moveable appliances such as dryers and ranges (Figures 4-51 and 4-52).

Fig. 4-51

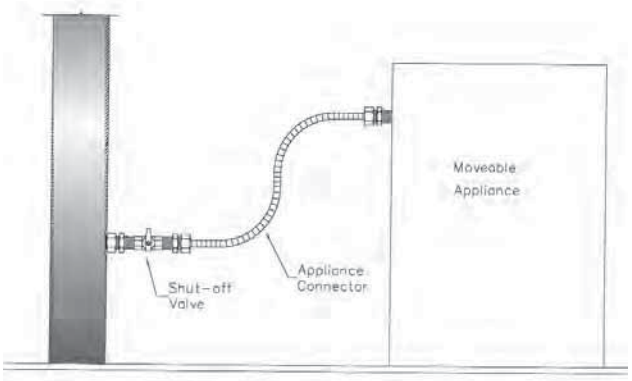

Fig. 4-52

b) The Appliance Stub-Out is mounted to a stud face (Fig. 4-53) and provides a fixed point to which a Gastite®/FlashShield™ mechanical fitting may be attached. The design of this stub-out ensures that the flexible tubing is routed away from any points of constraint that may subject the tubing to potential puncture threats.

c) The Straight Stub provides a fixed point for the Gastite®/FlashShield™ mechanical fitting and a stable platform for service meter connections. The Straight Stub may be mounted to the face of a stud (Fig. 4-54) or mounted to an optional Stub Bracket with supplied self-drilling metal screws (Fig. 4-55). The optional bracket is designed to span typical stud construction. The compact design of the straight stub allows for multiple stub-outs within the stud cavity.

The Straight Stub may also be used to pass through joist and wall constructions (Fig. 4-56). It is important to follow all requirements for sleeving when passing through masonry construction.

Fig. 4-53

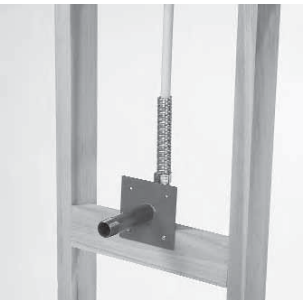

Fig. 4-54

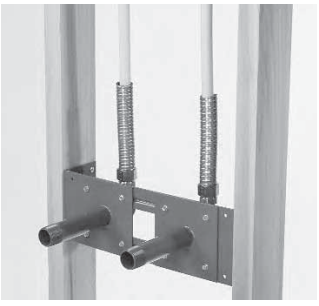

Fig. 4-55

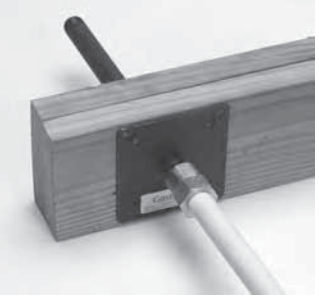

Fig. 4-56

4.6.2 Direct Connection – Non-Moveable Appliances

Gastite®/FlashShield™ CSST may be connected directly to non-movable appliances such as water heaters, furnaces, boilers and island cook-tops (Figures 4-57) without the installation of a termination outlet or flexible appliance connector. All local codes requiring drip legs and shut-off valves must be observed. Drip legs and shut-off valves must be securely mounted.

a) When appliances such as water heaters, furnaces or fireplaces have metallic vents which extend beyond or protrude through the roof physical contact between the Gastite® CSST and the appliance cabinet or vent is prohibited. Gastite recommends that all continuous metallic systems be bonded and grounded.

Physical contact with appliance cabinets that have metallic vents which extend beyond or protrude through the roof is acceptable.

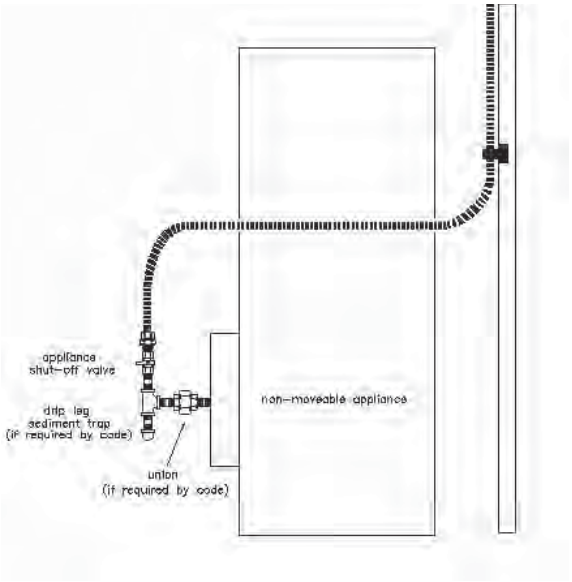

Fig. 4-57

4.6.3 Gas Convenience Outlet

a) Barbecue Grills – Movable grills shall be connected using an approved outdoor appliance connector which shall be attached to the CSST system either at a termination fitting or a quick disconnect device as shown in the figure (Fig. 4-58).

b) Permanently mounted grills located on decks (Fig. 4-59) shall be connected to the CSST system as shown in the figure and in accordance with the manufacturer's instructions. The outdoor portion of the CSST run shall be supported against the side of any of the inside deck joists.

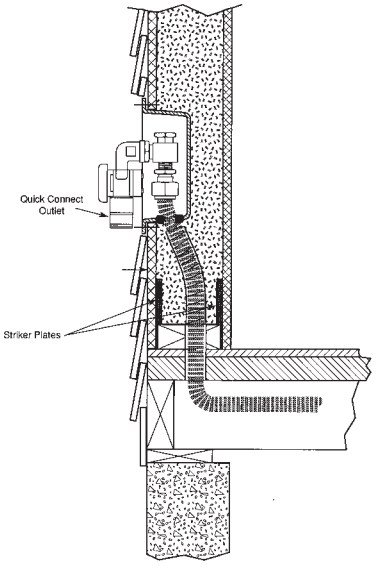

Fig. 4-58

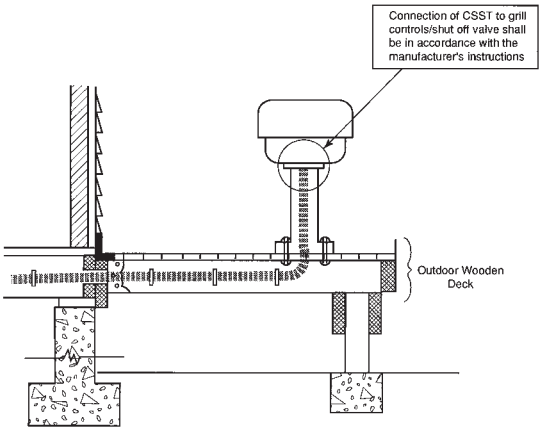

Fig. 4-59

Gastite Division
1116 Vaughn Parkway / Portland, TN 37148
800.662.0208 / www.gastite.com / gastite@gastite.com

4.6.4 Special Applications

a) Roof Mounted Equipment (Fig. 4-60) – Gastite®/FlashShield™ Flexible Gas Piping can be used in an outdoor rooftop application. When used in this application Gastite® is to be supported off the surface of the roofing material. This support allows for adequate drainage on the roof, product protection from snow, and is commonly required by code.

When Gastite®/FlashShield™ Flexible Gas Piping is installed in an outdoor rooftop application the following requirements must be met:

1. Support materials will be selected to provide an adequate anchoring point that addresses the lightweight flexible nature of Gastite®/FlashShield™. This can be accomplished through either the weight of the support or adhering the support to the roof materials. The support materials must also be selected to be non-damaging to the roofing material. (Check with roof material manufacturer for approved adhering methods and non-damaging materials/installations.)
2. It is also important to select the appropriate metal pipe clamps or straps to firmly affix the tubing to the support.
3. The supports shall lift the tubing at least 3" from the surface of the roof, higher as required by code or local conditions. (Check with local code officials to determine height requirements as defined by the local code or conditions.)
4. Support spacing will follow the recommendations as outlined in Table 4-5 below.

Fig. 4-60

Table 4-5		
Roof-Top Support Spacing		
Gastite®/ FlashShield™ Size	EHD	Max Support Spacing
3/8"	13	6 Feet
1/2"	18	6 Feet
3/4"	23	6 Feet
1"	31	8 Feet
1-1/4"	37	8 Feet
1-1/2"	47	8 Feet
2"	60	8 Feet

Gastite®/FlashShield™ shall penetrate roofing in the manner and using the materials as defined by the roofing manufacturer in order to maintain the manufacturer's warranty (Figures 4-61 and 4-62). When passing through the deck Gastite®/FlashShield™ must be properly terminated or pass through an appropriate fixed conduit (Figures 4-63 and 4-64). NOTE: As roofing manufacturers generally have proprietary penetration systems and require trained installers, it is extremely important to obtain approval and instructions from the roofing manufacturer prior to performing any work. Failure to do so can result in voiding the roofing warranty.

Lengths of Gastite®/FlashShield™ CSST which run vertically up the side of the building shall be protected in accordance with the General Provisions section of these guidelines, Section 4.3.6.

Note: Roof penetration detailed prints available under "Engineering Specs" at www.gastite.com.

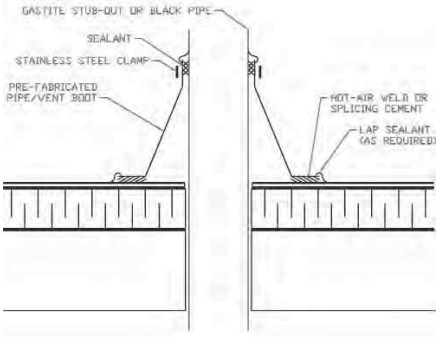

Fig. 4-61

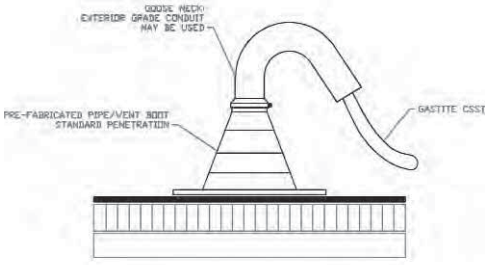

Fig. 4-62

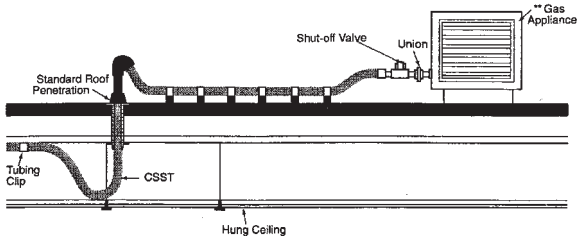

Fig. 4-63

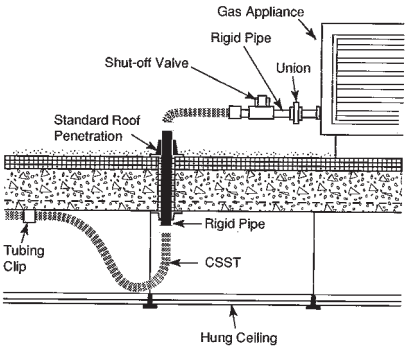

Fig. 4-64

b) Pad Mounted Equipment (Fig. 4-65) – Moveable gas appliances on concrete pads or blocks, such as heat pumps, air conditioners, pool heaters and NGV refueling systems, shall be connected to the Gastite®/FlashShield™ CSST system at a termination fitting using either rigid pipe or an approved outdoor appliance connector.

c) Gas Packs and Other Non-Moveable Equipment (Fig. 4-66) – Can be connected to the Gastite®/FlashShield™ CSST system either through a terminating fitting and rigid pipe or directly with Gastite®/FlashShield™ CSST connected to the appliance shut-off valve.

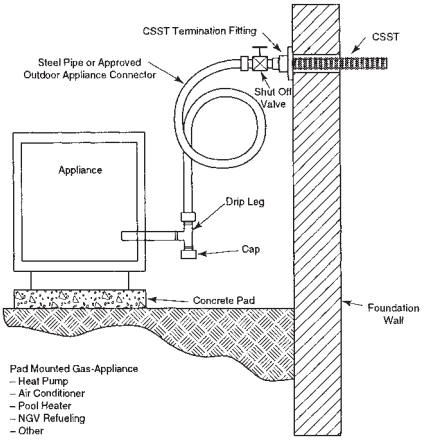

Fig. 4-65

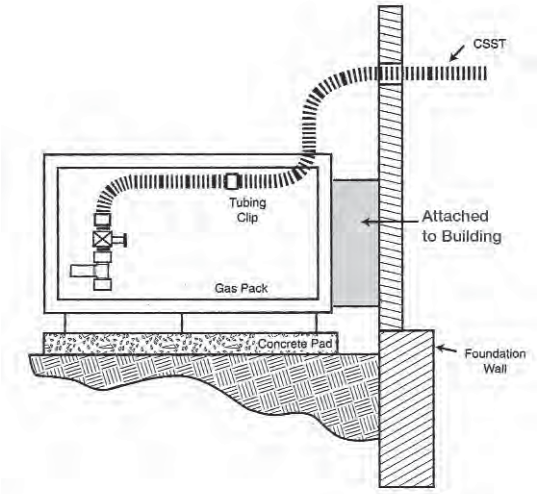

Fig. 4-66

d) Gas Lamps – Permanently mounted lights located on decks shall be connected to the Gastite®/FlashShield™ CSST system in the same fashion as permanently mounted grills as shown in the figure and in accordance with the manufacturers instructions.

e) Yard Mounted Lights – Shall be connected to the Gastite®/FlashShield™ CSST system as shown in Figure 4-67. All Gastite®/FlashShield™ CSST installed below grade shall be installed in accordance with Section 4.9.

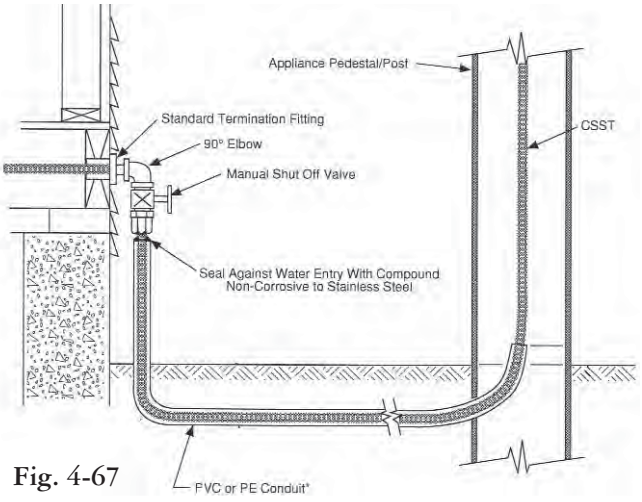

Fig. 4-67

Gastite Division
1116 Vaughn Parkway / Portland, TN 37148
800.662.0208 / www.gastite.com / gastite@gastite.com

f) Infrared Heaters (Fig. 4-68) - Infrared heaters that are solidly mounted to ceilings and walls of structures may be connected to the Gastite®/FlashShield™ CSST system as shown in the figures below and in accordance with the manufacturers instructions. High Density infrared heaters generally fall into this category. Gastite®/FlashShield™ CSST should be mounted to a fixed point and not on the end involved with the typical expansion and contraction associated with these heaters.

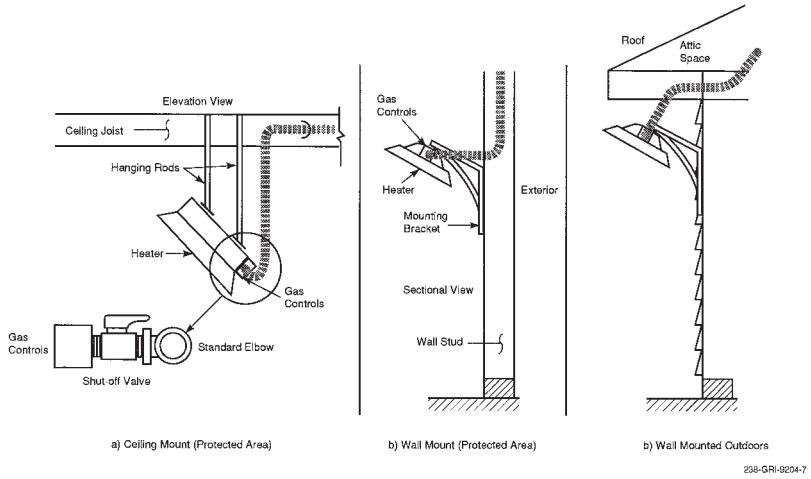

Fig. 4-68

Infrared heaters that are mounted to allow movement of the heater must use an appropriate appliance/flex connector between the heater and the properly terminated Gastite®/FlashShield™. Low Density heaters, tube heaters and heaters hung from chains fall into this category.

Heaters and installations must comply with ANSI Z83.6, "Standard for gas fired infrared heaters."

g) Gas Fireplace – Gastite®/FlashShield™ Flexible Gas Tubing may be used to deliver gas directly to the control valve of a gas fireplace (Fig. 4-69). Gastite®/FlashShield™ Flexible Gas Piping may also be used to deliver gas directly to the insert of a gas fireplace in decorative and heat generating fireplaces (Fig. 4-70). Per code valves shall be rigidly mounted.

CSST and Gastite®/FlashShield™ brass fittings should not be used inside the firebox for log lighters/gas wands or in any firebox where wood logs will be burned due to the potential for physical harm to the tubing (Fig. 4-71).

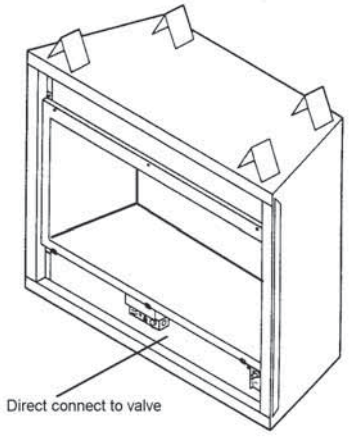

Fig. 4-69

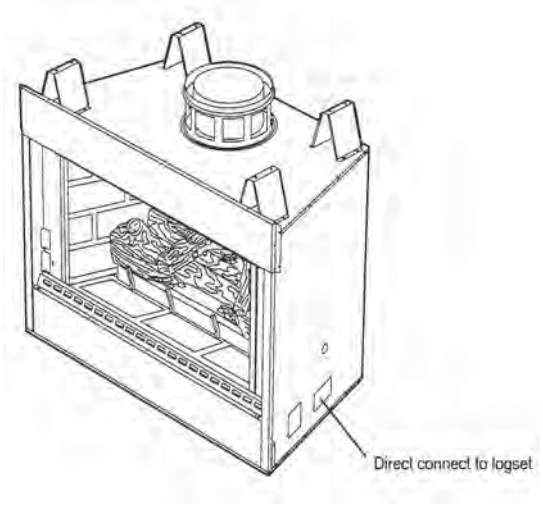

Fig. 4-70

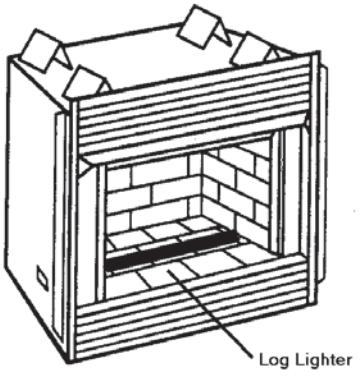

Fig. 4-71

The Gastite® Angle Stub is designed to create a secure mounting point or stub-out for the transition from Gastite®/FlashShield™ CSST to log-lighters, gas logs, or firebox insert's controls. Refer to Section 4.2 for Angle Stub Installation.

Proper Angle Stub Installation

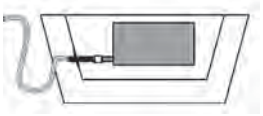

Improper Angle Stub Installation

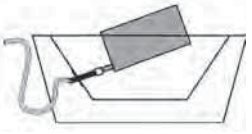

Fig. 4-72

The Gastite® Angle Stub shall not be connected in such a way that the log-lighter, gas log, or other components angle out of the fireplace. To correct for the insertion angle into the firebox, metal shims such as fender washers can be used. (See the proper and improper installation Fig. 4-72)

Gastite®/FlashShield™ Mechanical Fittings are approved to be concealed and can be connected directly to a valve controlling gas flow to a fireplace appliance. The Gastite®/FlashShield™ CSST and valve connection can be installed behind the wall, beneath the floor, hearth, or behind the brickwork of the fireplace (Fig. 4-75).

Where it is necessary to install Gastite®/FlashShield™ through masonry materials in fireplace construction, the plastic jacket shall remain intact and the tubing should be routed through sleeving that is appropriate for the application. Sleeving is not required through ceramic liners in decorative fireplaces and heat generating fireplaces.

Gastite®/FlashShield™ may not be run above the flue within a masonry chimney.

Where it is necessary to install Gastite®/FlashShield™ through sheet metal enclosures (such as fireplaces) the tubing should be routed or supported to prevent physical contact with the enclosure. If direct contact cannot be avoided a rubber grommet may be used to prevent physical contact with the enclosure. Otherwise a Gastite® angle stub or rigid pipe components must be used.

In certain configurations corrugated tubing or flexible appliance connectors feeding a fireplace or gas log set can whistle due to gas flow velocity. Acoustics can usually be avoided by restricting Gastite®/FlashShield™ CSST sizes to the maximum capacity as shown in Table 4-6 below.

No Physical Contact

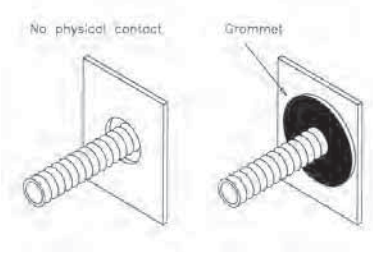

Fig. 4-73

Fig. 4-74

Fig. 4-75

Note: Strike Protection (Floppy) not shown for clarity.

Table 4-6		
Fireplace Sizing		
Gastite®/ FlashShield™ Size	EHD	BTUH
1/2"	18	45,000
3/4"	23	80,000
1"	31	125,000

Gastite Division
1116 Vaughn Parkway / Portland, TN 37148
800.662.0208 / www.gastite.com / gastite@gastite.com

4.7 Manifold

Manifolds are installed where multiple runs are made from a common location in a parallel arrangement. The manifold may be manufactured from a one-piece malleable iron or brass casting (Fig. 4-76), a welded fabrication of steel sub-components or an assembly of approved, malleable iron tees and short nipples (Fig. 4-77). Manifolds must be rigidly installed. This can be achieved through the use of a mounted manifold bracket or by rigidly piping into a non-movable gas-piping component.

Depending on the location and available space, different mounting arrangements are permitted. A manifold may be mounted in any orientation on the surface of an interior wall, between open floor joists, in attic spaces, crawl spaces, within a partition wall, or inside an enclosure. A manifold assembly without a regulator can be concealed.

The Gastite®/FlashShield™ CSST Capacity Tables include losses for four 90° bends and two end fittings. Tubing runs with a larger number of bends and/or fittings shall be increased by an equivalent length of tubing to the following equation: L=1.3n where L is additional length of tubing and n is the number of additional fittings and/or bends. Each port of a manifold can be taken as an additional fitting. For example: the tube running from the last port of a 3-port manifold should have 3.9 feet (3 ports/fittings x 1.3) added to the run length for the purpose of sizing. This method is applicable for all manifolds whose ports are equal or greater in size than the pipe connected to the corresponding port.

The installation of manifold assemblies using a pounds-to-inches regulator must be in accordance with all local codes, and the following guidelines:

a) A manifold assembly directly integrating a pounds-to-inches regulator shall be installed in an accessible location so that the regulator can be inspected, maintained and serviced if repair or replacement is required.

b) For manifold systems that use a pounds-to-inches regulator installed behind an access panel, all tubing penetrations in the cabinet should be sealed, caulked or grommeted. The cabinet must be ventilated through the panel/door and not into a wall space.

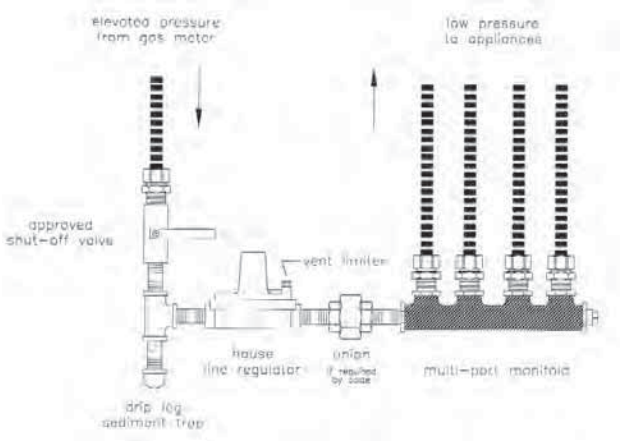

Fig. 4-76

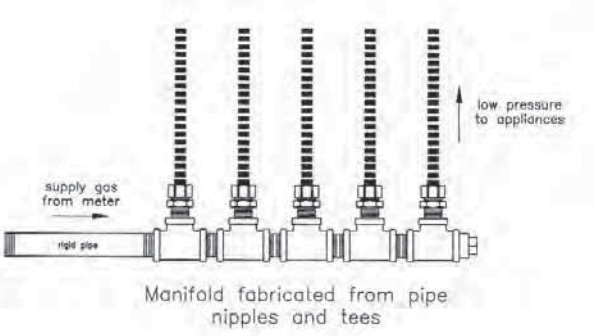

Fig. 4-77

c) Open face cabinets (Fig. 4-78), which open on to the normal room environment, may be utilized without the need for ventilation or penetration sealing requirements.

Fig. 4-78

4.8 Pressure Regulator

4.8.1 Introduction (Fig. 4-79)

A Gastite®/FlashShield™ CSST system using line gas pressures above the maximum appliance input rating shall use a regulator to lower the downstream appliance supply pressure to 1/2 PSI, or less. The regulator shall have a lock-up feature that will limit the downstream pressure to 1/2 PSI. Line gas pressures at or below the maximum appliance input rating does do not require the use of a line regulator.

A Line Gas Regulator is defined as a pressure regulator placed in a gas line between the service regulator and the appliance regulator. Regulators supplied by Gastite Division are designed to supply the highest performance as Line Gas Regulators and feature precise regulating control from full flow down to pilot flows.

Regulators must be rigidly installed. This can be achieved by rigidly mounting or piping into a rigid gas-piping component.

Fig. 4-79

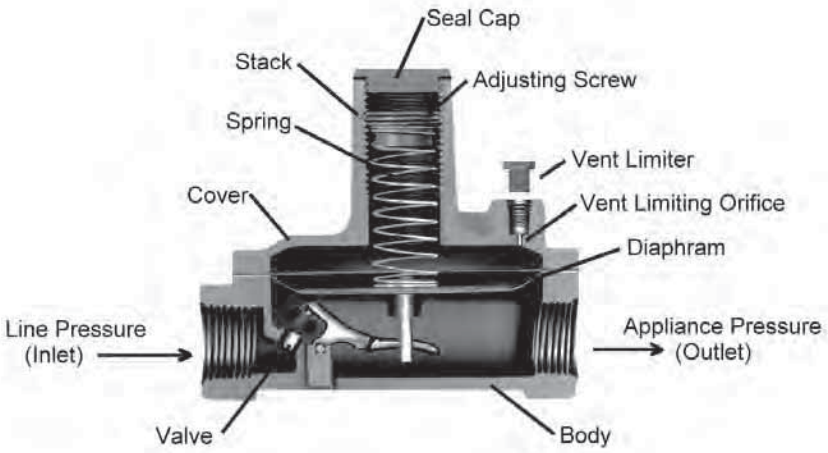

4.8.2 Sizing Instructions

Line Pressure Regulator Selection (Tables 4-7 through 4-10)

Line pressure regulators are typically used in a 2 or 5 PSI gas piping installation to reduce supply pressure to the appliance within required operating ranges (typically 4"WC - 8"WC natural gas or 10"WC - 11"WC LP gas).

Regulators Supplied by Gastite Division:

1) For natural gas, the regulator outlet pressure is set to 8"WC and the appliance runs are sized with a 3"WC pressure drop. This will allow for 5"WC inlet pressure at the appliance.

2) For propane gas, the regulator outlet pressure is set to 11"WC and the appliance runs are sized with a 0.5"WC drop. This will allow for a 10.5"WC inlet pressure at the appliance.

To select the correct regulator for pressure regulation, the following information must be established:

- Available inlet pressure range at the regulator inlet.
- Desired outlet pressure.
- Total maximum flow rate vs. regulator model number (Table 4-7 through Table 4-9).
- Largest single appliance flow rate vs. regulator model number (Table 4-10).

Gastite Division
1116 Vaughn Parkway / Portland, TN 37148
800.662.0208 / www.gastite.com / gastite@gastite.com

Regulator Capacity Tables

Table 4-7						
Regulator Capacity for Natural Gas with an 8" w.c. Outlet Pressure						
Capacities – 0.64 sp gr gas expressed in CFH (m^3/h)						
Model Number	Outlet Pressure	Operating Inlet Pressure				
		1/2 psi (34 mbar)	3/4 psi (52 mbar)	1 psi (69 mbar)	1-1/2 psi (103) mbar	2 psi (138 mbar)
T325-3-44/Reg8-300	8" w.c.	145 (4.1)	200 (5.7)	250 (7.1)	250 (7.1)	250 (7.1)
T325-5-44/Reg8-600	8" w.c.	335 (9.5)	475 (13.5)	550 (15.6)	550 (15.6)	550 (15.6)
T325-7L-44	8" w.c.	690 (19.5)	970 (27.5)	1000 (28.3)	1000 (28.3)	1000 (28.3)
T325-3L48 (OPD)	8" w.c.	160 (4.5)	200 (5.6)	200 (5.6)	200 (5.6)	200 (5.6)
T325-5AL600 (OPD)	8" w.c.	345 (9.6)	425 (11.9)	425 (11.9)	425 (11.9)	425 (11.9)
T325-7L-210D (OPD)	8" w.c.	650 (18.4)	900 (25.5)	900 (25.5)	900 (25.5)	900 (25.5)
30052-NG	8" w.c.	386 (10.9)	691 (19.6)	848 (24.0)	1063 (30.1)	1155 (32.7)
30053-NG	8" w.c.	386 (10.9)	899 (25.5)	1059 (30.0)	1382 (39.1)	1501 (42.5)
30153-NG	8" w.c.	3189 (90.3)	4638 (131.3)	5297 (150.0)	7230 (204.7)	7891 (223.4)
Capacity value for most typical 2 PSI parallel systems when trunk run is sized to deliver 1 PSI to regulator inlet.						

Table 4-8						
Regulator Capacity for Natural Gas with an 11 w.c. Outlet Pressure						
Capacities – 0.64 sp gr gas expressed in CFH (m^3/h)						
Model Number	Outlet Pressure	Operating Inlet Pressure				
		1/2 psi (34 mbar)	3/4 psi (52 mbar)	1 psi (69 mbar)	1-1/2 psi (103) mbar	2 psi (138 mbar)
T325-3-44P/Reg11-300	11" w.c.	93 (2.6)	172 (4.9)	225 (6.4)	250 (7.1)	250 (7.1)
T325-5-44P/Reg11-600	11" w.c.	211 (6.0)	391 (11.1)	511 (14.5)	550 (15.6)	550 (15.6)
T325-7L-44*	11" w.c.	441 (12.5)	816 (23.1)	1000 (28.3)	1000 (28.3)	1000 (28.3)
T325-3L48* (OPD)	11" w.c.	120 (3.4)	200 (5.6)	200 (5.6)	200 (5.6)	200 (5.6)
T325-5AL600* (OPD)	11" w.c.	260 (7.3)	425 (11.9)	425 (11.9)	425 (11.9)	425 (11.9)
T325-7L-210D* (OPD)	11" w.c.	490 (13.9)	821 (23.2)	900 (25.5)	900 (25.5)	900 (25.5)
30052-LP	11" w.c.	297 (8.4)	621 (17.6)	778 (22.0)	967 (27.4)	1155 (32.7)
30053-NG*	11" w.c.	297 (8.4)	807 (22.9)	1093 (31.0)	1297 (36.7)	1501 (42.5)
30153-NG*	11" w.c.	2349 (66.5)	4121 (116.7)	5264 (149.1)	6593 (186.7)	7921 (224.3)
Capacity value for most typical 2 PSI parallel systems when trunk run is sized to deliver 1 PSI to regulator inlet.						
*Regulator requires in-field adjustment to obtain output pressure of 11".						

Table 4-9						
Regulator Capacity for Propane with an 11" w.c. Outlet Pressure						
Capacities – 1.52 sp gr gas expressed in kBTUh						
		Operating Inlet Pressure				
Model Number	Outlet Pressure	1/2 psi (34 mbar)	3/4 psi (52 mbar)	1 psi (69 mbar)	1-1/2 psi (103) mbar	2 psi (138 mbar)
T325-3-44P/Reg11-300	11" w.c.	147	270	355	395	395
T325-5-44P/Reg11-600	11" w.c.	335	620	810	870	870
T325-7L-44*	11" w.c.	700	1290	1585	1585	1585
T325-3L48* (OPD)	11" w.c.	190	315	315	315	315
T325-5AL600* (OPD)	11" w.c.	410	670	670	670	670
T325-7L-210D* (OPD)	11" w.c.	775	1300	1425	1425	1425
30052-LP	11" w.c.	547	997	1285	1731	1981
30053-NG*	11" w.c.	712	1296	1671	2251	2575
30153-NG*	11" w.c.	3724	6784	8741	11775	13470
Capacity value for most typical 2 PSI parallel systems when trunk run is sized to deliver 1 PSI to regulator inlet.						
*Regulator requires in-field adjustment to obtain output pressure of 11".						

Table 4-10		
Largest Single Appliance Served by Regulator		
Regulator	Natural Gas (CFH)	Propane (kBTUh)
	0.64 SG gas	1.52 SG gas
T325-3-X / RegX-300	140	215
T325-5-X / RegX-600	300	460
T325-7L-44	900	1380
T325-3L48 (OPD)	200	305
T325-5AL600 (OPD)	425	650
T325-7L-210D (OPD)	900	1380

4.8.3 Installation

a) The regulator shall be installed in an accessible location with an approved shut-off valve and drip leg on the inlet side and a union (if required by code) on the outlet side so that it may be inspected, maintained and serviced if repair or replacement is required. The regulator must be installed with gas flow as indicated by the arrow on the casting.

b) Shut-off valves should be opened and closed slowly. A rapidly opened or closed valve can shock the regulator causing abnormal behavior.

c) The regulator is suitable for multi-poise mounting. When using a vent-limiting orifice however, the regulator must be mounted in a horizontal upright position.

d) The vent-limiting orifice (Fig. 4-80) is a fail-safe device that permits free air movement above the diaphragm during normal operation. In the unlikely event of a diaphragm rupture, the vent limiting orifice will limit gas escapement to 1.0 CFH natural gas at 2 PSI and 0.65 CFH LP at 2 PSI. Both values are below the ANSI standard of 2.5 CFH. Note: The vent-limiting orifice does not allow gas to escape to the environment during operation.

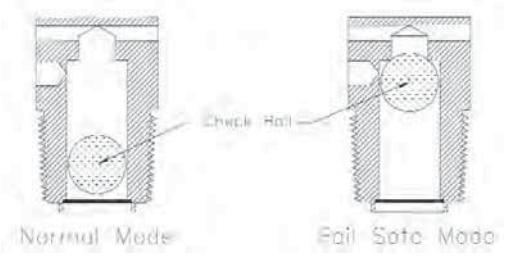

Fig. 4-80

e) Do not leak test the vent orifice with liquid leak test solution. This action will contaminate the internal check ball mechanism or plug the breathing hole resulting in erratic regulator performance

f) When using a vent-limiting orifice, the maximum inlet pressure is 2 PSI for Propane and 5 PSI for Natural Gas.

g) When using a vent line, the line must be at least the same size as the regulator vent connection for all runs up to 30 feet and shall be increased one pipe size over its entirety for every additional 30 feet that the vent runs. Vent lines may be constructed of any approved fuel gas piping, including Gastite®/FlashShield™ CSST. The vent shall be designed to prevent entry of water, insects or other foreign materials that could cause blockage of the line. Do not vent to appliance flue, pilot light or building exhaust system.

h) The regulators supplied by Gastite Division have a temperature range limit of -40 to 240 degrees F. The lower temperature limit and rust proof construction design enables the regulator to be used for outdoor installations. To minimize the potential for moisture condensation and freezing problems in or around the vent port, the vent-limiting orifice must be removed for outdoor installations.

Fig. 4-81

Outdoor Mounting Options: (Figures 4-81 through 4-83)

The regulator may be mounted upside down with the open vent port facing down. Consideration must be taken to ensure there is adequate clearance for snow buildup.

The regulator may be mounted horizontally, with a vent tube installed in the venting port. The end of the tube must be facing downward, and should be designed to prevent water and foreign material from causing a blockage. Another alternative is an outdoor plastic vent protector designed for the regulator.

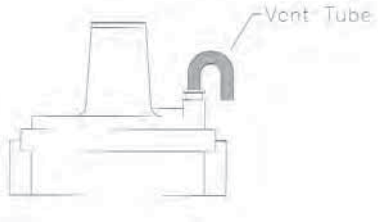

Fig. 4-82

Fig. 4-83

Gastite Division
1116 Vaughn Parkway / Portland, TN 37148
800.662.0208 / www.gastite.com / gastite@gastite.com

4.8.4 Performance

a) A performance test should be conducted while operating all appliances at full load. This will test if adequate pressure is reaching each appliance under full-load conditions. To accomplish this, measure the line pressure at the appliance connection while operating the appliance.

b) The inlet pressure for typical gas appliances under full load conditions should be equal to but not exceeding the appliance's recommended inlet pressure range. If these pressure ranges cannot be obtained, a slight adjustment to the service regulator or the pounds-to-inches regulator may be necessary to increase line pressure.

4.8.5 Regulator Outlet Pressure Adjustment

a) Adjustment can be accomplished by first removing the regulator seal cap to expose the adjusting screw. Turning the screw clockwise will increase outlet pressure, turning it counter-clockwise will decrease pressure.

b) If spring adjustment will not produce the desired outlet pressure, check to make sure the main supply pressure is adequate. If the main supply pressure is adequate, consult factory for other line-regulator options. Do not continue to turn regulator adjusting screw clockwise if the outlet pressure readings do not continue to increase. This may result in overfiring due to loss of pressure control, should there be a subsequent increase in inlet pressure.

c) The line regulators can be adjusted with an outlet pressure ranging between 7 and 11 inches water column. The regulator must be adjusted according to the manufacturers recommended procedure. A pressure gauge mounted just downstream of the regulator can monitor the set pressure under various loads.

4.8.6 Over-Pressurization Protection

Downstream over-pressure protection must be provided in any gas piping installation where a line-pressure regulator is utilized for pressures in excess of 2 PSI to supply appliances rated for 1/2 PSI or less inlet pressure. Special line regulators of suitable control and capacity must be installed in place of the standard line regulator. This regulator contains an integral over-pressure protection device (OPD) (Fig. 4-84). This special regulator with OPD must be assembled and listed by the manufacturer in accordance with Z21.80, "Standard for line pressure regulators". Refer to Tables 4-7 through 4-9 for OPD capacities and sizing.

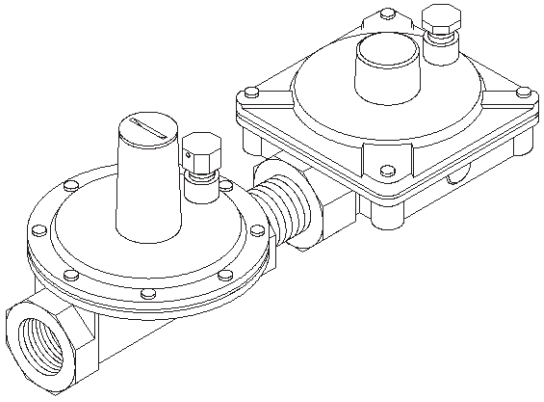

Fig. 4-84

NOTE: When using regulators other than those specified by Gastite Division for use with the Gastite® system, careful consideration must be given to the regulator performance characteristics such as required inlet pressure, flow capacity, the pressure drop through the regulator and available outlet pressure.

4.9 Underground Installations

a) Gastite®/FlashShield™ CSST shall not be buried directly in the ground or directly embedded in concrete (e.g. slab on grade construction, patio slabs, foundations and walkways). When it is necessary to bury or embed Gastite®/FlashShield™ CSST, the tubing shall be routed inside a non-metallic, watertight conduit that has an inside diameter at least 1/2 inch larger than the O.D. of the tubing (Fig. 4-85). For ends of the conduit installed outdoors, the conduit shall be sealed at any exposed end to prevent water from entering.

b) Venting of the conduit has typically been required because the use of conventional materials such as rigid pipe has usually resulted in some form of connection or union within the conduit. Unlike rigid pipe however, Gastite®/FlashShield™ CSST is continuous with only one fitting at each end of the run, and no fittings inside the conduit. As a result, the possibility of gas build-up due to fitting leaks has been eliminated. Therefore, Gastite Division does not require the sleeving to be vented to the outside of the structure.

If, however, venting is still required, Figure 4-86 below depicts gas piping installed within plastic sleeving that is vented to the outdoors. Other possible venting routes, such as the attic and roof, may also be considered but must be reviewed with the local administrative authority, and must prevent the entry of water and foreign objects.

For ends of Gastite®/FlashShield™ CSST exiting the plastic sleeving, a termination fitting (XR2TRM-#-NF) threaded into an end "plug", can be used to provide a stable platform for attachment (Fig. 4-87).

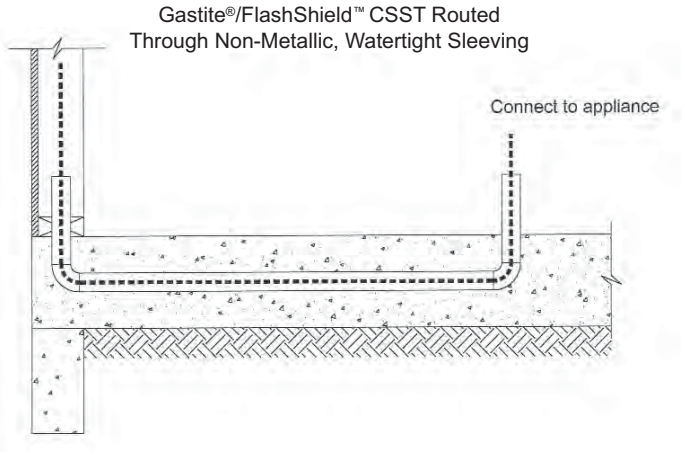

Fig. 4-85

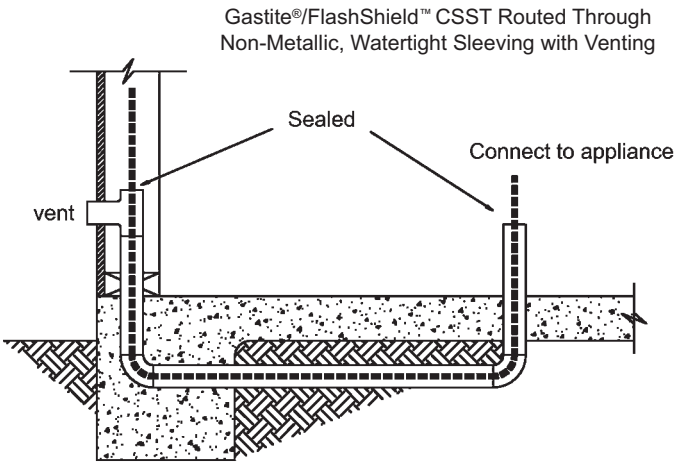

Fig. 4-86

Fig. 4-87

Gastite Division
1116 Vaughn Parkway / Portland, TN 37148
800.662.0208 / www.gastite.com / gastite@gastite.com

4.10 Electrical Bonding of Gastite®/FlashShield™ CSST

a) Unlike Gastite®, there are no additional bonding requirements for FlashShield™ imposed by the manufacturer's installation instructions. FlashShield™ is to be bonded in accordance with the National Electrical Code NFPA 70 Article 250.104 in the same manner as the minimum requirements for rigid metal piping. However, installers must always adhere to any local requirements that may conflict with these instructions.

b) Direct bonding of Gastite® CSST is required for all gas-piping systems incorporating Gastite® CSST whether or not the connected gas equipment is electrically powered. This requirement is provided as part of the manufacturer's instruction for single-family and multi-family buildings. A person knowledgeable in electrical system design, the local electrical code and these requirements should specify the bonding for commercial applications.

Gastite® CSST installed inside or attached to a building or structure shall be electrically continuous and direct bonded to the electrical ground system of the premise in which it is installed. The gas piping system shall be considered to be direct bonded when installed in accordance with the following:

The piping is permanently and directly connected to the electrical service equipment enclosure, the grounded conductor at the electrical service, the grounding electrode conductor (where of sufficient size) or to one or more of the grounding electrodes used. For single and multi-family structures, a **single bond connection** shall be made downstream of the individual gas meter for each housing unit and upstream of any CSST connection. The bonding conductor shall be no smaller than a 6 AWG copper wire or equivalent. The bonding jumper shall be attached in an approved manner in accordance with NEC Article 250.70 and the point of attachment for the bonding jumper shall be accessible. Bonding/grounding clamps shall be installed in accordance with its listing per UL 467 and shall make metal-to-metal contact with the piping. This bond is in addition to any other bonding requirements as specified by local codes.

Fig. 4-88 - Bonding Clamp on Steel Pipe Segment or Gastite Stub-Out.
(Remove any paint or coating on pipe surface beneath clamp location)

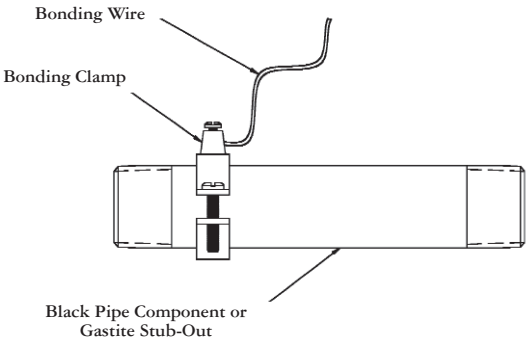

For attachment to the CSST gas piping system, a single bonding clamp must be attached to either a segment of steel pipe, a rigid pipe component or to the Gastite brass hex fitting. For attachment to a segment of steel pipe or a rigid pipe component **any** bonding clamp listed to UL467 may be used. For attachment to a Gastite hex fitting, clamps manufactured by Erico (part number CWP1J for 3/8" & 1/2", CWP2J for 3/4" thru 1 1/4" and CWP3J for 1 1/2" & 2") must be used. The corrugated stainless steel tubing portion of the gas piping system shall not be used as the point of attachment of the bonding conductor at any location along its length under any circumstances. See examples provided in Figures 4-88 and 4-89.

Fig. 4-89 - Bonding Clamp on Gastite CSST fitting.
(Erico Clamp #CWP1J, CWP2J or CWP3J)

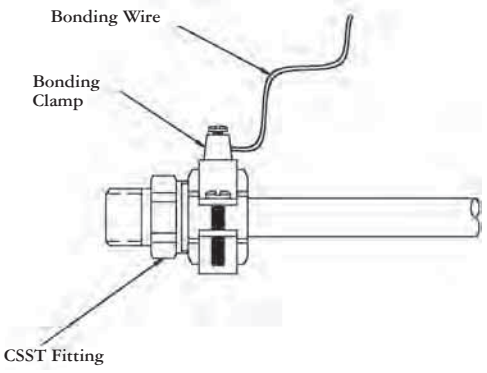

Proper bonding and grounding will reduce the risk of damage and fire from a lightning strike. Lightning is a highly destructive force. Even a nearby lightning strike that does not strike a structure directly can cause all electrically conductive systems in the structure to become energized. If these systems are not adequately bonded, the difference in electrical potential between the systems may cause the charge to arc from one system to another. Arcing can cause damage to CSST. Direct bonding and grounding as set forth above will reduce the risk of arcing and related damage over a non direct bonded system.

Depending upon conditions specific to the location of the structure in which the Gastite system is being installed, including but not limited to whether the area is prone to lightning, the owner of the structure should consider whether a lightning protection system is necessary or appropriate. Lightning protection systems are beyond the scope of this bulletin, but are covered by NFPA 780, the Standard for the Installation of Lightning Protection Systems and other standards.

Section 5.0 Inspection, Repair and Replacement

5.1 Minimum Inspection Requirements

Gastite®/FlashShield™ CSST Installation Checklist

Date:	Elevated Pressure: Yes No
Contractor:	Comments:
Address:	

- ☐ Qualified Installer with Certification Card.
- ☐ Components from same manufacturer.
- ☐ Strike protection.
- ☐ System Sizing.
- ☐ Connected to fixed appliances only. Flexible connector for moveable appliances.
- ☐ Regulator isolated or removed for pressure test.
- ☐ Regulator horizontal when using vent limiter.
- ☐ Regulator is installed in an accessible location with shut-off valve and drip leg mounted ahead of regulator.
- ☐ Jacket kept in place for outdoor installations.
- ☐ Sleeved for underground and through masonry.
- ☐ Supported but not restricted.
- ☐ Bonded per section 4.10.

Gastite Division
1116 Vaughn Parkway / Portland, TN 37148
800.662.0208 / www.gastite.com / gastite@gastite.com

5.2 Installation Checklist Description

Corrugated Stainless Steel Tubing (CSST) has been design certified by the Canadian Standards Association since 1990 for use as a fuel gas piping system. Gastite®/FlashShield™ CSST has been tested per ANSI LC1 as required for approval and as an approved gas piping material in the National Fuel Gas Code-NFPA 54 & 58, the International Fuel Gas Code-ICC, and with the Uniform Plumbing Code-IAPMO.

Approval: Conditions and Requirements

A flexible gas piping system using Gastite®/FlashShield™ CSST must be installed in accordance with all local building codes and the manufacturer's instructions. The following checklist is designed to assist the local administrative authority to perform an inspection of a fuel gas piping system using corrugated stainless steel tubing.

1. Gastite®/FlashShield™ flexible gas piping may only be installed by a qualified installer who has successfully completed the manufacturer's certification training program. A manufacturer's certification card is required to purchase and install Gastite®/FlashShield™ flexible gas piping.

2. Only the components provided or specified by the Gastite Division (including strike protection) as part of the piping system are to be used in the installation.

3. Gastite®/FlashShield™ CSST routed in a location which is concealed, constrained and within 3 inches of a potential threat must be protected against damage using protection devices listed in the manufacturer's Design and Installation Guide.

4. Sizing of the flexible gas piping system must be performed using capacity tables found in the manufacturer's Design and Installation Guide or other code approved CSST capacity tables.

5. Gastite®/FlashShield™ CSST should not be connected to moveable appliances. Connections to moveable appliances such as ranges and clothes dryers should be accomplished with a flexible appliance connector.

6. The Gastite®/FlashShield™ flexible gas piping system must be pressure tested for leaks during rough construction in accordance with all local codes. In the absence of local requirements, test in accordance with NFPA 54, National Fuel Gas Code, which is 1-1/2 times the maximum working pressure but not less than 3 PSI. To subject the entire Gastite®/FlashShield™ CSST system to pressure test, the pressure regulators should be isolated or removed.

7. Regulators are suitable for multi-poise mounting. When using a vent-limiting device however, the regulator must be mounted in a horizontal upright position.

8. A manifold assembly utilizing a pounds-to-inches regulator shall include a ball valve ahead of the regulator and installed in an accessible location so that the regulator can be inspected, maintained and serviced if repair or replacement is required.

9. When installed outdoors, the external jacket shall remain intact as much as possible. Exposed portions of the stainless steel tubing shall be wrapped to provide protection from corrosive threats.

10. For installations buried underground, under concrete/asphalt or embedded in concrete, Gastite®/FlashShield™ CSST must be routed in a non-metallic watertight conduit which has an inside diameter at least 1/2 in. larger than the outside diameter of the tubing. Under concrete/asphalt slab, sleeved CSST must be buried in accordance with all local codes. No mechanical joints are permitted within the conduit.

11. Installation must be properly supported to not only keep the job professional and organized but also to prevent excess strain on the bends and fittings. Supports installed in addition to the practices outlined by Gastite Division, restricts the tubing and increases susceptibility to strike damage.

12. Gas piping systems must be properly bonded to the structure's electrical service. A qualified professional following the NEC approved methods as outlined in section 4.10 shall perform the bonding installation.

13. Gastite® CSST must be physically separated from other continuous metallic systems in accordance with section 4.3 of this guide.

5.3 Repair of Damaged CSST

5.3.1 Determine Damage

Crushed, dented or kinked tubing may result in restricted flow conditions. Use the following guidelines to determine the severity of damage and whether repair or replacement is necessary.

a) Gastite®/FlashShield™ CSST gas tubing must be repaired if damaged by puncture of any kind, e.g. nails, screws, drill bits, etc.

b) No repairs or replacement of the tubing is necessary if the Gastite®/FlashShield™ CSST tubing is only slightly dented due to impact or crushing and the overall crush depth is less than 1/3 the diameter of the tubing. Minimal flow reduction will occur at this limited damage level.

c) Repair or replacement is necessary if the overall crush depth is greater than 1/3 the diameter of the tubing. Restricted flow may occur at this damage level.

d) Gastite®/FlashShield™ CSST tubing bent beyond its minimum bend radius so that a crease or kink remains must be repaired. Restricted flow may occur at this damage level.

5.3.2 Method of Repair

A line splice can be made, but if the tubing run is short and easily accessible, the preferred repair method is to replace the entire length. Often, a tubing run can be replaced faster than repairing the damaged section. The Gastite®/FlashShield™ mechanical joint fittings can be removed and easily re-attached. This is the preferred method because it does not add any additional fitting joints to the system.

Where repairs or replacements involve only the Gastite®/FlashShield™ CSST, the tubing can be joined with standard pipe couplings or Gastite®/FlashShield™ CSST coupling (Fig. 5-1).

Where repairs or replacements involve CSST systems of different manufacturers, the systems can be joined through standard pipe couplings and each manufacturer's recommended CSST fitting (Fig. 5-2).

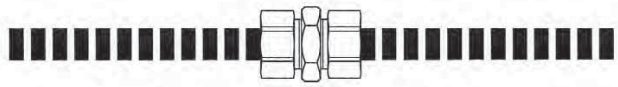

Typical Tubing Splice with Gastite Coupling

Fig. 5-1

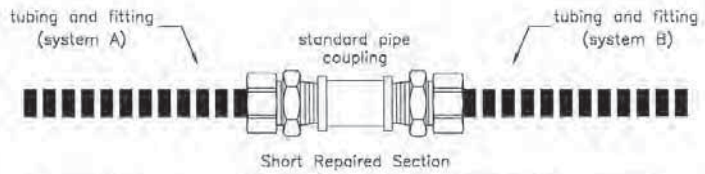

Repair of Damaged Tubing with Noncompatible Systems

Fig. 5-2

Gastite Division
1116 Vaughn Parkway / Portland, TN 37148
800.662.0208 / www.gastite.com / gastite@gastite.com

Section 6.0 Pressure/Leakage Testing

6.1 General Guidelines for Pressure Testing

a) The final installation must be inspected and tested for leaks in accordance with the local/state codes. In the absence of local codes, installation must be in accordance with the current edition of the National Fuel Gas Code, ANSI Z223.1/NFPA-54 (USA), or Installation Codes CSA-B149.1 (Canada). Pressure testing must comply with these guidelines or local codes. When local codes are more stringent, local codes must be followed.

b) Pressure testing must be performed during rough construction of the facility (before interior walls are finished). This will permit a more complete inspection of the piping system during the pressure testing.

c) Do not connect appliances or pressurize with fuel gas until after the pressure test has been passed.

d) All gas outlets for appliance connections should be capped during pressure testing.

6.2 Elevated Pressure Systems

If an elevated pressure system requires a pressure test of 10 PSI or greater, the regulator must be removed or isolated prior to pressure testing.

The test may be performed as a one-part test replacing the regulator with a suitable jumper pipe length for pressure testing the entire system (Figures 6-1 and 6-2).

Fig. 6-1

Fig. 6-2

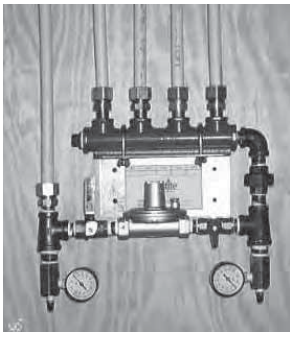

Fig. 6-3

Or a two-part test may be performed as shown in Figure 6-3:

- The first test is performed on the elevated pressure section, between the meter connection and the pounds-to-inches line regulator.
- The second test is performed on the low-pressure section, between the outlet of the pounds-to-inches line regulator and the gas appliance outlets.
- For a two-part test, it is important to remember to close both gas shut-off valves to avoid damage to the regulator.
- When opening the shut-off valves it is important to open them slowly. A quickly opened valve can shock the regulator and cause abnormal regulator behavior.

6.3 Appliance Connection Leakage Check Procedure

After the final pressure test, inspection and final construction is complete (finished interior walls), connect the appliances to the system. This connection can be made using an approved flexible connector for movable appliances, or with Gastite®/FlashShield™ CSST tubing or rigid black pipe for fixed appliances. Turn the gas on at the meter and inspect for leakage before operating the appliances.

a) Connections made at the appliances should be leak checked with a chloride-free bubble solution. Leak check solutions must comply with ASTM E515, or be labeled as non-corrosive.

b) Before placing the appliances in operation, the tubing system should be purged. This displaces the air in the system with fuel gas. Be sure to vent into a well-ventilated area.

NOTE: Leak test solutions may cause corrosion in some types of material in the gas tubing system, be sure to water rinse after the test and thoroughly dry all contacted material. Also, the vent limiter should not be leak tested with a liquid test solution. This will contaminate the internal ball check mechanism or plug the breathing hole, resulting in erratic regulator operation.

Gastite Division
1116 Vaughn Parkway / Portland, TN 37148
800.662.0208 / www.gastite.com / gastite@gastite.com

Section 7.0 Sizing Tables and Pressure Drop Charts

For Gastite® and FlashShield™ CSST

7.1 CSST Capacity Tables - Natural Gas

Table 7-1

Maximum Capacity of Gastite®/FlashShield™ Flexible Gas Piping in Cubic Feet Per Hour of Natural Gas with a Gas Pressure of 0.5 psi or Less and a **Pressure Drop of 0.5"WC** (based on a 0.60 specific gravity gas)

Tubing		Tubing Length (ft)														
EHD	Size	5	10	15	20	25	30	40	50	60	70	80	90	100	125	150
13	3/8"	47	33	27	23	22	20	17	15	14	13	11	11	10	9	8
18	1/2"	136	95	78	67	60	54	47	42	38	35	33	31	29	26	24
23	3/4"	225	161	132	116	106	96	83	75	68	63	60	57	54	46	42
31	1"	601	421	341	296	268	240	206	185	169	155	145	138	136	118	100
37	1-1/4"	872	623	511	444	398	365	317	284	260	241	226	213	203	182	166
47	1-1/2"	1766	1277	1057	924	844	764	668	602	553	514	483	457	435	392	360
60	2"	3811	2714	2225	1932	1732	1584	1376	1233	1128	1046	980	925	878	787	720

Tubing		Tubing Length (ft)														
EHD	Size	200	250	300	400	500	600	700	800	900	1000	1100	1200	1300	1400	1500
13	3/8"	7	6	6	5	4	4	3	3	3	3	3	3	2	2	2
18	1/2"	21	18	17	14	13	12	11	10	9	9	9	8	8	8	7
23	3/4"	38	34	32	28	25	23	21	20	19	18	17	17	16	15	15
31	1"	90	81	74	58	52	47	44	41	38	36	35	33	32	31	30
37	1-1/4"	145	130	119	103	92	85	79	74	70	66	63	61	58	56	54
47	1-1/2"	315	284	260	228	205	189	176	165	156	149	142	136	131	127	123
60	2"	625	561	513	445	399	351	325	305	287	273	261	250	240	232	224

Table 7-2

Maximum Capacity of Gastite®/FlashShield™ Flexible Gas Piping in Cubic Feet Per Hour of Natural Gas with a Gas Pressure of 0.5 psi or Less and a **Pressure Drop of 1.0"WC** (based on a 0.60 specific gravity gas)

Tubing		Tubing Length (ft)														
EHD	Size	5	10	15	20	25	30	40	50	60	70	80	90	100	125	150
13	3/8"	68	50	40	33	29	26	22	19	17	16	15	14	13	11	10
18	1/2"	195	136	111	95	85	78	67	60	54	50	47	44	42	37	34
23	3/4"	351	303	202	168	148	133	116	105	96	89	84	79	75	68	62
31	1"	659	547	450	384	345	312	269	240	219	202	189	178	169	150	137
37	1-1/4"	1222	872	716	623	558	511	444	398	365	338	317	299	284	255	233
47	1-1/2"	2442	1766	1461	1277	1167	1057	924	832	764	711	668	632	602	542	498
60	2"	5352	3811	3124	2714	2433	2225	1932	1732	1584	1469	1376	1299	1233	1106	1011

Tubing		Tubing Length (ft)														
EHD	Size	200	250	300	400	500	600	700	800	900	1000	1100	1200	1300	1400	1500
13	3/8"	8	7	7	7	6	5	5	5	4	4	4	4	4	3	3
18	1/2"	29	26	24	21	18	17	15	14	14	13	12	12	11	11	10
23	3/4"	54	49	45	39	35	32	30	28	26	25	24	23	22	21	21
31	1"	118	105	96	83	74	67	62	58	55	52	49	47	45	44	42
37	1-1/4"	203	182	166	145	130	119	111	104	98	93	89	85	82	79	76
47	1-1/2"	435	392	360	315	284	261	243	228	216	205	197	189	182	176	170
60	2"	878	787	720	625	561	492	457	428	404	383	366	351	337	325	314

Tables include losses for four 90° bends and two end fittings. Tubing runs with a larger number of bends and/or fittings shall be increased by an equivalent length of tubing to the following equation: L=1.3n where L is additional length of tubing and n is the number of additional fittings and/or bends.

Table 7-3

Maximum Capacity of Gastite®/FlashShield™ Flexible Gas Piping in Cubic Feet Per Hour of Natural Gas with a Gas Pressure of 0.5 psi or Less and a **Pressure Drop of 1.5"WC** (based on a 0.60 specific gravity gas)

Tubing		Tubing Length (ft)														
EHD	Size	5	10	15	20	25	30	40	50	60	70	80	90	100	125	150
13	3/8"	83	58	47	40	36	32	28	25	22	21	19	18	17	15	14
18	1/2"	240	168	136	118	105	95	82	73	67	62	58	54	51	46	42
23	3/4"	381	273	225	197	177	162	141	127	116	108	102	96	91	82	75
31	1"	958	672	547	472	421	384	331	295	269	249	232	219	207	185	169
37	1-1/4"	1490	1063	873	759	681	623	542	486	445	413	387	365	347	311	285
47	1-1/2"	2957	2138	1769	1546	1393	1279	1118	1008	925	861	809	766	729	657	603
60	2"	6271	4465	3661	3180	2850	2607	2264	2030	1856	1721	1612	1522	1445	1295	1185

Tubing		Tubing Length (ft)														
EHD	Size	200	250	300	400	500	600	700	800	900	1000	1100	1200	1300	1400	1500
13	3/8"	12	11	10	8	7	7	6	6	5	5	5	5	4	4	4
18	1/2"	36	32	29	25	23	21	19	18	17	16	15	14	14	13	13
23	3/4"	66	59	54	47	42	39	36	34	32	30	29	28	27	26	25
31	1"	145	130	118	102	91	83	77	72	67	64	61	58	56	54	52
37	1-1/4"	248	222	203	177	159	145	135	126	119	113	108	104	100	96	93
47	1-1/2"	527	475	436	381	343	315	293	276	261	248	238	228	220	212	205
60	2"	1029	922	844	733	657	601	557	522	492	468	446	428	411	397	383

Table 7-4

Maximum Capacity of Gastite®/FlashShield™ Flexible Gas Piping in Cubic Feet Per Hour of Natural Gas with a Gas Pressure of 0.5 psi or Less and a **Pressure Drop of 2.0"WC** (based on a 0.60 specific gravity gas)

Tubing		Tubing Length (ft)														
EHD	Size	5	10	15	20	25	30	40	50	60	70	80	90	100	125	150
13	3/8"	97	67	54	47	41	38	32	29	26	24	22	21	20	18	16
18	1/2"	278	195	158	136	122	111	95	85	78	72	67	63	60	53	48
23	3/4"	437	314	259	225	203	186	162	146	133	124	116	110	105	94	86
31	1"	1110	779	633	547	488	444	384	342	312	288	269	253	240	214	195
37	1-1/4"	1713	1223	1004	873	783	717	623	559	512	475	445	420	399	358	328
47	1-1/2"	3382	2446	2024	1769	1594	1464	1279	1153	1058	985	925	876	834	751	690
60	2"	7220	5141	4215	3661	3282	3001	2607	2337	2137	1982	1856	1752	1664	1492	1364

Tubing		Tubing Length (ft)														
EHD	Size	200	250	300	400	500	600	700	800	900	1000	1100	1200	1300	1400	1500
13	3/8"	14	12	11	10	8	8	7	7	6	6	6	5	5	5	5
18	1/2"	42	37	34	29	26	24	22	21	19	18	17	17	16	15	15
23	3/4"	75	68	62	54	49	45	41	39	37	35	33	32	31	30	29
31	1"	169	150	137	118	105	96	89	83	78	74	71	67	65	62	60
37	1-1/4"	285	255	234	203	182	167	155	145	137	130	124	119	115	111	107
47	1-1/2"	603	543	499	436	393	361	336	315	298	284	272	261	251	243	235
60	2"	1185	1062	971	844	756	692	641	601	567	538	514	492	474	457	441

Tables include losses for four 90° bends and two end fittings. Tubing runs with a larger number of bends and/or fittings shall be increased by an equivalent length of tubing to the following equation: L=1.3n where L is additional length of tubing and n is the number of additional fittings and/or bends.

Gastite Division
1116 Vaughn Parkway / Portland, TN 37148
800.662.0208 / www.gastite.com / gastite@gastite.com

Table 7-5

Maximum Capacity of Gastite®/FlashShield™ Flexible Gas Piping in Cubic Feet Per Hour of Natural Gas with a Gas Pressure of 0.5 psi or Less and a **Pressure Drop of 3.0"WC** Line Regulator Outlet (8 in. WC) (based on a 0.60 specific gravity gas)

Tubing		Tubing Length (ft)														
EHD	Size	5	10	15	20	25	30	40	50	60	70	80	90	100	125	150
13	3/8"	124	88	71	62	56	50	42	37	32	31	29	27	25	23	21
18	1/2"	342	240	195	168	150	136	118	105	95	88	82	78	73	66	60
23	3/4"	502	418	345	301	270	248	216	194	178	165	151	139	130	111	98
31	1"	1502	1054	856	740	659	601	518	463	422	391	364	343	325	295	264
37	1-1/4"	2086	1489	1222	1063	953	872	758	680	623	578	541	511	485	435	398
47	1-1/2"	4081	2952	2442	2135	1950	1766	1544	1391	1277	1188	1117	1057	1006	906	832
60	2"	9167	6528	5352	4648	4167	3811	3310	2967	2714	2516	2357	2225	2113	1894	1732

Tubing		Tubing Length (ft)														
EHD	Size	200	250	300	400	500	600	700	800	900	1000	1100	1200	1300	1400	1500
13	3/8"	19	17	15	12	11	9	8	8	7	7	6	6	6	6	5
18	1/2"	51	46	42	36	32	29	27	25	24	23	21	21	20	19	18
23	3/4"	91	82	75	66	59	54	50	47	44	42	40	38	37	36	34
31	1"	228	203	185	145	130	118	109	102	96	91	86	82	79	76	74
37	1-1/4"	346	311	284	247	222	203	188	176	166	158	151	145	139	134	130
47	1-1/2"	728	655	602	526	474	436	405	381	360	343	328	315	303	293	284
60	2"	1505	1349	1233	1071	960	843	782	732	691	656	626	600	577	556	538

Table 7-6

Maximum Capacity of Gastite®/FlashShield™ Flexible Gas Piping in Cubic Feet Per Hour of Natural Gas with a Gas Pressure of 0.5 psi or Less and a **Pressure Drop of 4.0"WC** (based on a 0.60 specific gravity gas)

Tubing		Tubing Length (ft)														
EHD	Size	5	10	15	20	25	30	40	50	60	70	80	90	100	125	150
13	3/8"	140	97	78	67	60	54	47	41	38	35	32	30	29	25	23
18	1/2"	397	278	226	195	175	158	136	122	111	102	95	90	85	76	69
23	3/4"	608	437	360	314	282	259	225	203	186	173	162	153	146	131	120
31	1"	1582	1110	902	779	695	633	547	488	444	411	384	361	342	305	278
37	1-1/4"	2400	1713	1407	1223	1097	1004	873	783	717	665	623	588	559	501	459
47	1-1/2"	4677	3382	2798	2446	2204	2024	1769	1594	1464	1362	1279	1211	1153	1038	954
60	2"	10140	7220	5920	5141	4609	4215	3661	3282	3001	2783	2607	2461	2337	2095	1916

Tubing		Tubing Length (ft)														
EHD	Size	200	250	300	400	500	600	700	800	900	1000	1100	1200	1300	1400	1500
13	3/8"	20	18	16	14	12	11	10	10	9	8	8	8	7	7	7
18	1/2"	60	53	48	42	37	34	31	29	28	26	25	24	23	22	21
23	3/4"	105	94	86	75	68	62	58	54	51	49	46	45	43	41	40
31	1"	240	214	195	169	150	137	127	118	111	105	100	96	92	89	86
37	1-1/4"	399	358	328	285	255	234	217	203	192	182	174	167	161	155	150
47	1-1/2"	834	751	690	603	543	499	464	436	413	393	376	361	347	336	325
60	2"	1664	1492	1364	1185	1062	971	901	844	796	756	722	692	665	641	620

Tables include losses for four 90° bends and two end fittings. Tubing runs with a larger number of bends and/or fittings shall be increased by an equivalent length of tubing to the following equation: L=1.3n where L is additional length of tubing and n is the number of additional fittings and/or bends.

Table 7-7

Maximum Capacity of Gastite®/FlashShield™ Flexible Gas Piping in Cubic Feet Per Hour of Natural Gas with a Gas Pressure of 0.5 psi or Less and a **Pressure Drop of 5.0"WC** (based on a 0.60 specific gravity gas)

Tubing		Tubing Length (ft)														
EHD	Size	5	10	15	20	25	30	40	50	60	70	80	90	100	125	150
13	3/8"	157	109	88	76	67	61	52	47	42	39	36	34	32	29	26
18	1/2"	445	312	253	218	195	177	153	136	124	115	107	101	95	85	78
23	3/4"	676	486	400	349	314	288	251	225	207	192	180	170	162	146	133
31	1"	1773	1244	1011	873	779	710	613	547	498	460	430	405	384	342	312
37	1-1/4"	2676	1910	1568	1363	1223	1119	973	873	799	741	695	656	623	559	512
47	1-1/2"	5191	3754	3106	2715	2446	2246	1964	1769	1625	1512	1420	1344	1279	1153	1058
60	2"	11312	8055	6603	5735	5141	4702	4084	3661	3348	3104	2908	2745	2607	2337	2137

Tubing		Tubing Length (ft)														
EHD	Size	200	250	300	400	500	600	700	800	900	1000	1100	1200	1300	1400	1500
13	3/8"	22	20	18	15	14	13	12	11	10	10	9	9	8	8	8
18	1/2"	67	60	54	47	42	38	35	33	31	29	28	27	26	25	24
23	3/4"	116	105	96	84	75	69	64	60	57	54	52	50	48	46	45
31	1"	269	240	219	189	169	154	142	133	125	118	113	108	103	100	96
37	1-1/4"	445	399	365	317	285	261	241	226	213	203	194	186	179	173	167
47	1-1/2"	925	834	766	669	603	554	515	484	458	436	417	400	386	373	361
60	2"	1856	1664	1522	1322	1185	1084	1005	941	888	844	805	772	742	715	692

Table 7-8

Maximum Capacity of Gastite®/FlashShield™ Flexible Gas Piping in Cubic Feet Per Hour of Natural Gas with a Gas Pressure of 0.5 psi or Less and a **Pressure Drop of 6.0"WC** (based on a 0.60 specific gravity gas)

Tubing		Tubing Length (ft)														
EHD	Size	5	10	15	20	25	30	40	50	60	70	80	90	100	125	150
13	3/8"	190	132	106	88	80	71	57	55	51	46	42	40	37	33	30
18	1/2"	488	342	278	240	214	195	168	150	136	126	118	111	105	94	85
23	3/4"	811	582	480	418	381	344	300	270	248	230	216	204	194	160	158
31	1"	2141	1502	1221	1054	941	856	740	660	601	556	518	489	463	420	376
37	1-1/4"	2923	2086	1713	1489	1336	1222	1063	953	872	809	758	716	680	610	558
47	1-1/2"	5644	4081	3377	2952	2697	2442	2135	1923	1766	1643	1544	1461	1391	1253	1151
60	2"	12874	9167	7516	6528	5852	5352	4648	4167	3811	3534	3310	3124	2967	2660	2433

Tubing		Tubing Length (ft)														
EHD	Size	200	250	300	400	500	600	700	800	900	1000	1100	1200	1300	1400	1500
13	3/8"	25	23	21	17	15	14	13	12	11	11	10	10	9	9	8
18	1/2"	73	66	60	51	46	42	39	36	34	32	31	29	28	27	26
23	3/4"	130	114	104	91	82	75	70	66	62	59	56	54	52	50	49
31	1"	325	290	264	207	185	169	156	145	137	130	124	118	114	109	105
37	1-1/4"	485	435	398	346	311	285	264	248	234	222	212	203	196	189	182
47	1-1/2"	1006	906	832	728	655	603	561	527	499	475	454	436	420	406	393
60	2"	2113	1894	1732	1505	1349	1185	1099	1029	971	922	880	844	811	782	756

Tables include losses for four 90° bends and two end fittings. Tubing runs with a larger number of bends and/or fittings shall be increased by an equivalent length of tubing to the following equation: L=1.3n where L is additional length of tubing and n is the number of additional fittings and/or bends.

Gastite Division
1116 Vaughn Parkway / Portland, TN 37148
800.662.0208 / www.gastite.com / gastite@gastite.com

7.2 CSST Capacity Tables - Natural Gas - Elevated Pressure

Table 7-9

Maximum Capacity of Gastite®/FlashShield™ Flexible Gas Piping in Cubic Feet Per Hour of Natural Gas with a Gas Pressure of 1.0 psi and a **Pressure Drop of 13.0"WC** (based on a 0.60 specific gravity gas)

Tubing		Tubing Length (ft)														
EHD	Size	5	10	15	20	25	30	40	50	60	70	80	90	100	125	150
13	3/8"	261	181	146	125	111	101	87	77	70	65	60	57	53	48	43
18	1/2"	613	428	346	298	266	242	208	185	168	156	145	136	129	115	105
23	3/4"	1068	766	631	550	495	454	395	355	326	303	284	269	255	230	211
31	1"	2889	2028	1648	1423	1269	1156	998	891	811	750	701	660	625	558	508
37	1-1/4"	4259	3040	2496	2170	1947	1781	1549	1389	1272	1180	1105	1044	992	890	814
47	1-1/2"	8114	5868	4855	4244	3824	3511	3069	2765	2539	2363	2220	2101	2000	1802	1655
60	2"	18066	12864	10546	9160	8211	7509	6522	5847	5347	4958	4644	4384	4163	3732	3413

Tubing		Tubing Length (ft)														
EHD	Size	200	250	300	400	500	600	700	800	900	1000	1100	1200	1300	1400	1500
13	3/8"	37	33	30	26	23	21	19	18	17	16	15	14	14	13	13
18	1/2"	90	80	73	63	56	51	47	44	41	39	37	35	34	33	32
23	3/4"	184	165	151	132	119	109	101	95	90	85	81	78	75	73	70
31	1"	439	391	357	308	275	250	231	216	203	193	184	176	169	162	157
37	1-1/4"	708	635	581	505	453	415	385	361	341	324	309	296	285	275	266
47	1-1/2"	1446	1303	1197	1046	942	865	805	757	716	682	652	626	603	582	564
60	2"	2964	2657	2430	2111	1892	1730	1605	1503	1419	1347	1286	1232	1185	1143	1105

Table 7-10

Maximum Capacity of Gastite®/FlashShield™ Flexible Gas Piping in Cubic Feet Per Hour of Natural Gas with a **Gas Pressure of 2.0 psi** and a **Pressure Drop of 1.0 psi** (based on a 0.60 specific gravity gas)

Tubing		Tubing Length (ft)														
EHD	Size	5	10	15	20	25	30	40	50	60	70	80	90	100	125	150
13	3/8"	388	270	216	187	166	151	129	115	105	93	89	85	79	71	64
18	1/2"	914	637	516	445	396	360	310	276	251	232	216	203	193	171	156
23	3/4"	1431	1098	844	792	712	650	567	510	437	420	407	386	366	330	302
31	1"	4256	2986	2427	2095	1870	1703	1470	1311	1195	1066	1031	972	920	822	748
37	1-1/4"	6156	4394	3607	3136	2813	2575	2238	2008	1838	1705	1598	1509	1433	1286	1177
47	1-1/2"	11596	8387	6938	6065	5464	5018	4386	3952	3629	3377	3172	3002	2858	2575	2365
60	2"	27381	19497	15985	13884	12446	11383	9886	8863	8105	7516	7040	6645	6311	5657	5174

Tubing		Tubing Length (ft)														
EHD	Size	200	250	300	400	500	600	700	800	900	1000	1100	1200	1300	1400	1500
13	3/8"	55	49	44	38	34	31	29	27	25	24	23	22	21	20	19
18	1/2"	134	120	109	94	83	76	70	65	61	58	55	53	51	49	47
23	3/4"	263	236	217	189	170	157	146	137	129	123	117	113	108	105	101
31	1"	645	576	525	453	404	370	342	320	301	285	272	260	249	240	232
37	1-1/4"	1023	918	840	730	655	603	559	524	495	470	449	430	414	399	386
47	1-1/2"	2076	1862	1710	1495	1347	1239	1153	1083	1025	976	933	896	863	834	807
60	2"	4494	4028	3684	3200	2869	2520	2337	2189	2066	1962	1873	1794	1725	1664	1609

Caution: Capacities shown in the elevated pressure tables may exceed the capacity of the line regulator. Refer to Section 4 for Regulator Capacities and Pressure Drops.

Tables include losses for four 90° bends and two end fittings. Tubing runs with a larger number of bends and/or fittings shall be increased by an equivalent length of tubing to the following equation: L=1.3n where L is additional length of tubing and n is the number of additional fittings and/or bends.

Table 7-11

Maximum Capacity of Gastite®/FlashShield™ Flexible Gas Piping in Cubic Feet Per Hour of Natural Gas with a **Gas Pressure of 5.0 psi** and a **Pressure Drop of 3.5 psi** (based on a 0.60 specific gravity gas)

Tubing		Tubing Length (ft)														
EHD	Size	5	10	15	20	25	30	40	50	60	70	80	90	100	125	150
13	3/8"	755	523	422	363	322	292	251	223	203	180	174	164	154	138	124
18	1/2"	1753	1223	990	853	759	691	595	529	482	445	415	390	369	329	299
23	3/4"	2777	1995	1645	1434	1289	1181	1031	926	849	763	740	700	665	598	548
31	1"	8066	5659	4600	3971	3543	3228	2786	2486	2265	2021	1955	1841	1744	1557	1418
37	1-1/4"	11323	8082	6635	5769	5175	4736	4118	3694	3380	3136	2939	2775	2636	2365	2164
47	1-1/2"	20829	15064	12463	10894	9953	9013	7879	7098	6518	6065	5698	5393	5134	4625	4247
60	2"	50581	36018	29529	25647	22991	21027	18263	16372	14973	13884	13005	12275	11658	10451	9558

Tubing		Tubing Length (ft)														
EHD	Size	200	250	300	400	500	600	700	800	900	1000	1100	1200	1300	1400	1500
13	3/8"	107	95	86	74	66	60	56	52	49	46	44	42	40	39	37
18	1/2"	258	229	209	180	160	145	134	125	118	112	106	101	97	94	90
23	3/4"	478	430	394	344	309	285	265	248	235	223	213	205	197	190	184
31	1"	1224	1092	995	859	767	702	649	606	571	541	515	493	473	456	440
37	1-1/4"	1882	1688	1545	1343	1205	1108	1028	963	910	864	825	791	761	734	710
47	1-1/2"	3713	3345	3072	2685	2419	2225	2070	1945	1841	1752	1676	1609	1550	1497	1450
60	2"	8301	7442	6806	5911	5299	4656	4317	4044	3817	3625	3459	3315	3188	3074	2972

Caution: Capacities shown in the elevated pressure tables may exceed the capacity of the line regulator. Refer to Section 4 for Regulator Capacities and Pressure Drops.

Tables include losses for four 90° bends and two end fittings. Tubing runs with a larger number of bends and/or fittings shall be increased by an equivalent length of tubing to the following equation: L=1.3n where L is additional length of tubing and n is the number of additional fittings and/or bends.

Gastite Division
1116 Vaughn Parkway / Portland, TN 37148
800.662.0208 / www.gastite.com / gastite@gastite.com

7.3 CSST Capacity Tables - Propane Gas

Table 7-12

Maximum Capacity of Gastite®/FlashShield™ Flexible Gas Piping in Thousands of BTU Per Hour of Liquefied Petroleum Gas with a Gas Pressure of 0.5 psi or Less and a **Pressure Drop of 0.5"WC** (based on a 1.52 specific gravity LP gas)

Tubing		Tubing Length (ft)														
EHD	Size	5	10	15	20	25	30	40	50	60	70	80	90	100	125	150
13	3/8"	78	53	42	37	33	31	26	22	21	19	17	17	16	15	13
18	1/2"	216	151	123	106	95	86	74	66	60	56	52	49	46	41	38
23	3/4"	391	280	219	180	162	151	131	118	107	94	94	90	85	76	66
31	1"	950	666	539	468	410	379	328	292	266	245	229	217	205	176	158
37	1-1/4"	1384	988	811	705	632	579	503	451	413	383	359	339	322	289	265
47	1-1/2"	2791	2018	1670	1460	1334	1208	1056	951	873	813	763	722	688	620	569
60	2"	6021	4288	3515	3053	2737	2503	2174	1949	1782	1653	1548	1461	1388	1244	1138

Tubing		Tubing Length (ft)														
EHD	Size	200	250	300	400	500	600	700	800	900	1000	1100	1200	1300	1400	1500
13	3/8"	11	10	10	8	6	6	5	5	5	4	4	4	4	4	4
18	1/2"	32	29	26	23	20	18	17	16	15	14	14	13	12	12	12
23	3/4"	60	53	50	44	40	36	34	32	30	29	27	26	25	24	24
31	1"	142	129	118	92	82	75	69	65	61	58	55	53	51	49	47
37	1-1/4"	230	206	189	164	147	135	125	117	111	105	100	96	93	89	86
47	1-1/2"	497	448	412	360	324	299	278	261	247	236	225	216	208	201	195
60	2"	988	886	810	704	631	556	515	483	456	433	413	396	381	367	355

Table 7-13

Maximum Capacity of Gastite®/FlashShield™ Flexible Gas Piping in Thousands of BTU Per Hour of Liquefied Petroleum Gas with a Gas Pressure of 0.5 psi or Less and a **Pressure Drop of 1.0"WC** (based on a 1.52 specific gravity LP gas)

5Tubing		Tubing Length (ft)														
EHD	Size	5	10	15	20	25	30	40	50	60	70	80	90	100	125	150
13	3/8"	106	74	60	51	45	41	35	31	29	26	25	23	22	19	18
18	1/2"	308	216	175	151	135	123	106	95	86	80	74	70	66	59	54
23	3/4"	497	357	294	257	231	212	184	166	152	141	133	125	119	107	98
31	1"	1235	866	704	608	542	494	427	381	347	320	299	282	267	238	217
37	1-1/4"	1938	1384	1136	988	886	811	705	632	579	537	503	475	451	405	371
47	1-1/2"	3877	2804	2320	2028	1827	1678	1467	1321	1213	1129	1061	1004	956	861	791
60	2"	8149	5802	4757	4132	3704	3387	2942	2637	2412	2236	2095	1977	1878	1683	1539

Tubing		Tubing Length (ft)														
EHD	Size	200	250	300	400	500	600	700	800	900	1000	1100	1200	1300	1400	1500
13	3/8"	15	13	12	10	9	8	8	7	7	6	6	6	6	5	5
18	1/2"	46	41	38	32	29	26	24	23	21	20	19	18	18	17	16
23	3/4"	86	77	71	62	55	51	47	44	42	40	38	36	35	34	33
31	1"	187	167	152	132	117	107	99	92	87	82	78	75	72	69	67
37	1-1/4"	322	289	265	230	206	189	175	164	155	147	141	135	130	125	121
47	1-1/2"	691	623	572	500	450	413	385	361	342	326	311	299	288	278	269
60	2"	1337	1199	1096	952	853	781	724	678	640	608	580	556	534	515	498

Tables include losses for four 90° bends and two end fittings. Tubing runs with a larger number of bends and/or fittings shall be increased by an equivalent length of tubing to the following equation: L=1.3n where L is additional length of tubing and n is the number of additional fittings and/or bends.

Table 7-14

Maximum Capacity of Gastite®/FlashShield™ Flexible Gas Piping in Thousands of BTU Per Hour of Liquefied Petroleum Gas with a Gas Pressure of 0.5 psi or Less and a **Pressure Drop of 2.0"WC** (based on a 1.52 specific gravity LP gas)

Tubing		Tubing Length (ft)														
EHD	Size	5	10	15	20	25	30	40	50	60	70	80	90	100	125	150
13	3/8"	154	106	86	74	66	60	51	45	41	38	35	33	31	28	25
18	1/2"	440	308	250	216	193	175	151	135	123	114	106	100	95	84	77
23	3/4"	692	497	410	357	321	294	257	231	212	197	184	174	166	149	137
31	1"	1759	1235	1004	866	773	704	608	542	494	457	427	402	381	340	309
37	1-1/4"	2716	1938	1591	1384	1241	1136	988	886	811	752	705	666	632	567	519
47	1-1/2"	5361	3877	3208	2804	2526	2320	2028	1827	1678	1561	1467	1388	1321	1190	1093
60	2"	11444	8149	6681	5802	5202	4757	4132	3704	3387	3141	2942	2777	2637	2364	2162

Tubing		Tubing Length (ft)														
EHD	Size	200	250	300	400	500	600	700	800	900	1000	1100	1200	1300	1400	1500
13	3/8"	22	19	18	15	13	12	11	10	10	9	9	8	8	8	8
18	1/2"	66	59	54	46	41	38	35	32	31	29	28	26	25	24	24
23	3/4"	119	107	98	86	77	71	66	62	58	55	53	51	49	47	46
31	1"	267	238	217	187	167	152	141	132	124	117	112	107	103	99	95
37	1-1/4"	451	405	371	322	289	265	245	230	217	206	197	189	182	175	169
47	1-1/2"	956	861	791	691	623	572	532	500	473	450	431	413	398	385	373
60	2"	1878	1683	1539	1337	1199	1096	1016	952	899	853	815	781	751	724	700

Table 7-15

Maximum Capacity of Gastite®/FlashShield™ Flexible Gas Piping in Thousands of BTU Per Hour of Liquefied Petroleum Gas with a Gas Pressure of 0.5 psi or Less and a **Pressure Drop of 2.5"WC** (based on a 1.52 specific gravity LP gas)

Tubing		Tubing Length (ft)														
EHD	Size	5	10	15	20	25	30	40	50	60	70	80	90	100	125	150
13	3/8"	172	119	96	83	75	67	57	51	46	43	40	37	35	31	29
18	1/2"	494	346	281	242	216	197	170	151	138	127	119	112	106	95	86
23	3/4"	767	551	454	396	361	326	285	256	235	218	205	193	184	165	152
31	1"	1966	1379	1121	968	877	787	679	606	552	510	477	449	425	379	346
37	1-1/4"	3027	2161	1774	1542	1384	1266	1101	988	904	838	786	742	705	632	579
47	1-1/2"	5922	4283	3543	3097	2830	2563	2240	2018	1853	1724	1620	1533	1460	1315	1208
60	2"	13247	9433	7733	6717	6021	5507	4783	4288	3921	3636	3406	3215	3053	2737	2503

Tubing		Tubing Length (ft)														
EHD	Size	200	250	300	400	500	600	700	800	900	1000	1100	1200	1300	1400	1500
13	3/8"	24	22	20	17	15	14	13	12	11	10	10	10	9	9	8
18	1/2"	74	66	60	52	46	42	39	36	34	32	31	30	28	27	26
23	3/4"	132	119	109	95	85	79	73	68	65	62	59	56	54	52	51
31	1"	298	266	243	209	187	171	158	147	139	132	125	120	115	111	107
37	1-1/4"	503	451	413	359	322	295	274	256	242	230	220	210	202	195	189
47	1-1/2"	1056	951	873	763	688	635	590	555	525	500	478	459	442	427	413
60	2"	2174	1949	1782	1548	1388	1223	1134	1062	1003	952	909	871	837	807	781

Tables include losses for four 90° bends and two end fittings. Tubing runs with a larger number of bends and/or fittings shall be increased by an equivalent length of tubing to the following equation: L=1.3n where L is additional length of tubing and n is the number of additional fittings and/or bends.

Gastite Division
1116 Vaughn Parkway / Portland, TN 37148
800.662.0208 / www.gastite.com / gastite@gastite.com

Table 7-16

Maximum Capacity of Gastite®/FlashShield™ Flexible Gas Piping in Thousands of BTU Per Hour of Liquefied Petroleum Gas with a Gas Pressure of 0.5 psi or Less and a **Pressure Drop of 3.0"WC** (based on a 1.52 specific gravity LP gas)

Tubing		Tubing Length (ft)														
EHD	Size	5	10	15	20	25	30	40	50	60	70	80	90	100	125	150
13	3/8"	190	132	106	91	81	74	63	56	51	47	44	41	39	35	31
18	1/2"	542	380	308	266	237	216	186	166	151	140	131	123	116	104	95
23	3/4"	839	603	497	433	390	357	311	280	257	239	224	212	201	181	166
31	1"	2165	1519	1235	1066	951	866	748	667	608	562	525	494	468	418	381
37	1-1/4"	3308	2361	1938	1685	1512	1384	1203	1079	988	916	859	811	770	691	632
47	1-1/2"	6480	4686	3877	3389	3053	2804	2451	2208	2028	1887	1773	1678	1597	1439	1321
60	2"	13960	9940	8149	7078	6345	5802	5040	4518	4132	3831	3588	3387	3217	2884	2637

Tubing		Tubing Length (ft)														
EHD	Size	200	250	300	400	500	600	700	800	900	1000	1100	1200	1300	1400	1500
13	3/8"	27	24	22	19	17	15	14	13	12	12	11	10	10	10	9
18	1/2"	82	73	66	57	51	46	43	40	38	36	34	32	31	30	29
23	3/4"	145	130	119	104	93	86	80	75	71	67	64	62	59	57	55
31	1"	329	293	267	231	206	187	173	162	152	144	137	132	126	122	117
37	1-1/4"	550	493	451	392	352	322	299	280	265	251	240	230	221	213	206
47	1-1/2"	1155	1041	956	835	753	691	643	604	572	544	521	500	481	465	450
60	2"	2291	2053	1878	1631	1462	1337	1240	1161	1096	1041	994	952	915	883	853

Tables include losses for four 90° bends and two end fittings. Tubing runs with a larger number of bends and/or fittings shall be increased by an equivalent length of tubing to the following equation: L=1.3n where L is additional length of tubing and n is the number of additional fittings and/or bends.

7.4 CSST Capacity Tables - Propane Gas - Elevated Pressure

Table 7-17

Maximum Capacity of Gastite®/FlashShield™ Flexible Gas Piping in Thousands of BTU Per Hour of Liquefied Petroleum Gas with a **Gas Pressure of 2.0 psi** and a **Pressure Drop of 1.0 psi** (based on a 1.52 specific gravity LP gas)

Tubing		Tubing Length (ft)														
EHD	Size	5	10	15	20	25	30	40	50	60	70	80	90	100	125	150
13	3/8"	608	426	341	293	262	238	203	181	164	146	140	132	124	111	101
18	1/2"	1449	1010	818	705	627	571	491	438	398	367	343	322	305	272	247
23	3/4"	2395	1735	1419	1237	1120	1027	896	806	732	665	643	604	578	515	477
31	1"	6725	4720	3811	3290	2954	2692	2323	2072	1877	1685	1629	1525	1454	1290	1182
37	1-1/4"	9804	6998	5745	4995	4481	4101	3565	3199	2927	2716	2545	2403	2283	2048	1874
47	1-1/2"	18322	13251	10963	9583	8755	7928	6931	6244	5734	5335	5012	4744	4516	4068	3736
60	2"	43262	30806	25256	21936	19665	17984	15620	14003	12806	11875	11123	10499	9971	8939	8175

Tubing		Tubing Length (ft)														
EHD	Size	200	250	300	400	500	600	700	800	900	1000	1100	1200	1300	1400	1500
13	3/8"	86	77	69	60	54	49	45	42	40	38	36	34	33	31	30
18	1/2"	213	190	172	148	132	120	111	104	97	92	88	84	80	77	75
23	3/4"	415	373	343	299	269	248	231	217	205	195	186	178	172	166	160
31	1"	1019	910	829	716	638	587	542	507	477	452	431	412	395	381	367
37	1-1/4"	1630	1462	1338	1163	1044	955	886	830	784	745	711	682	656	632	612
47	1-1/2"	3266	2942	2702	2362	2128	1963	1827	1716	1624	1546	1479	1420	1368	1321	1279
60	2"	7100	6365	5821	5056	4532	3994	3704	3469	3275	3110	2968	2844	2735	2637	2550

Caution: Capacities shown in the elevated pressure tables may exceed the capacity of the line regulator. Refer to Section 4 for Regulator Capacities and Pressure Drops.

Table 7-18

Maximum Capacity of Gastite®/FlashShield™ Flexible Gas Piping in Thousands of BTU Per Hour of Liquefied Petroleum Gas with a **Gas Pressure of 5.0 psi** and a **Pressure Drop of 3.5 psi** (based on a 1.52 specific gravity LP gas)

Tubing		Tubing Length (ft)														
EHD	Size	5	10	15	20	25	30	40	50	60	70	80	90	100	125	150
13	3/8"	1185	826	662	569	509	461	396	352	318	284	275	257	243	216	196
18	1/2"	2778	1938	1569	1351	1203	1095	942	839	763	705	657	618	585	521	474
23	3/4"	4359	3153	2582	2251	2037	1866	1629	1463	1332	1206	1169	1099	1051	938	866
31	1"	13652	8945	7222	6234	5600	5102	4404	3929	3556	3194	3090	2890	2756	2444	2241
37	1-1/4"	18033	12872	10568	9188	8243	7543	6558	5883	5384	4995	4681	4420	4199	3767	3448
47	1-1/2"	32910	23801	19691	17213	15727	14241	12449	11216	10299	9583	9003	8521	8111	7308	6711
60	2"	79918	56908	46656	40523	36326	33223	28855	25867	23657	21936	20547	19395	18419	16512	15101

Tubing		Tubing Length (ft)														
EHD	Size	200	250	300	400	500	600	700	800	900	1000	1100	1200	1300	1400	1500
13	3/8"	169	150	136	117	104	96	88	82	77	73	69	66	64	61	59
18	1/2"	408	363	331	285	254	231	213	199	187	177	168	161	154	148	143
23	3/4"	755	679	622	544	488	451	419	394	372	354	338	324	312	301	292
31	1"	1934	1726	1572	1357	1212	1113	1029	961	905	857	817	781	750	722	697
37	1-1/4"	2997	2689	2461	2140	1919	1757	1630	1527	1442	1370	1308	1254	1206	1163	1125
47	1-1/2"	5866	5285	4853	4242	3822	3527	3282	3083	2918	2778	2657	2551	2457	2373	2298
60	2"	13116	11758	10753	9340	8373	7379	6842	6409	6050	5745	5483	5254	5052	4872	4710

Caution: Capacities shown in the elevated pressure tables may exceed the capacity of the line regulator. Refer to Section 4 for Regulator Capacities and Pressure Drops.

Tables include losses for four 90° bends and two end fittings. Tubing runs with a larger number of bends and/or fittings shall be increased by an equivalent length of tubing to the following equation: L=1.3n where L is additional length of tubing and n is the number of additional fittings and/or bends.

Gastite Division
1116 Vaughn Parkway / Portland, TN 37148
800.662.0208 / www.gastite.com / gastite@gastite.com

7.5 Gastite®/FlashShield™ CSST Pressure Drop Tables

Table 7-19-NG (Sheet 1 of 2)

Gastite®/FlashShield™ CSST Pressure Drop Tables

Pressure drop per foot in inches of water column (based on Natural Gas of 0.60 specific gravity)

CFH	3/8"	1/2"	3/4"	1"	1-1/4"	1-1/2"	2"	CFH	3/8"	1/2"	3/4"	1"	1-1/4"	1-1/2"	2"
10	0.005	0.001	0	0	0	0	0	1000			2.275	0.326	0.132	0.03	0.007
20	0.020	0.002	0.001	0	0	0	0	1050			2.52	0.359	0.146	0.033	0.007
30	0.044	0.005	0.001	0	0	0	0	1100			2.779	0.393	0.161	0.036	0.008
40	0.075	0.009	0.003	0.001	0	0	0	1150			3.05	0.429	0.176	0.04	0.009
50	0.114	0.014	0.004	0.001	0	0	0	1200			3.335	0.466	0.192	0.044	0.009
60	0.161	0.02	0.006	0.001	0	0	0	1250			3.633	0.505	0.209	0.048	0.01
70	0.216	0.027	0.009	0.002	0.001	0	0	1300			3.945	0.545	0.227	0.052	0.011
80	0.278	0.035	0.011	0.002	0.001	0	0	1350			4.27	0.587	0.245	0.056	0.012
90	0.347	0.045	0.015	0.003	0.001	0	0	1400			4.608	0.63	0.264	0.061	0.013
100	0.424	0.055	0.018	0.004	0.001	0	0	1450			4.96	0.675	0.284	0.065	0.014
110	0.508	0.066	0.022	0.004	0.001	0	0	1500				0.721	0.304	0.07	0.015
120	0.599	0.078	0.027	0.005	0.002	0	0	1550				0.769	0.326	0.075	0.016
130	0.696	0.091	0.032	0.006	0.002	0	0	1600				0.818	0.347	0.081	0.017
140	0.801	0.105	0.037	0.007	0.002	0	0	1650				0.869	0.37	0.086	0.018
150	0.913	0.12	0.043	0.008	0.003	0.001	0	1700				0.921	0.394	0.092	0.019
160	1.031	0.137	0.049	0.009	0.003	0.001	0	1750				0.975	0.418	0.098	0.02
170	1.156	0.22	0.055	0.01	0.003	0.001	0	1800				1.03	0.443	0.104	0.022
180	1.288	0.246	0.062	0.011	0.004	0.001	0	1850				1.087	0.468	0.11	0.023
190	1.427	0.273	0.07	0.013	0.004	0.001	0	1900				1.145	0.495	0.117	0.024
200	1.572	0.301	0.078	0.014	0.005	0.001	0	1950				1.205	0.522	0.123	0.025
225	1.964	0.378	0.1	0.018	0.006	0.001	0	2000				1.266	0.55	0.13	0.027
250	2.397	0.463	0.124	0.022	0.008	0.002	0	2050				1.328	0.578	0.137	0.028
275	2.87	0.556	0.152	0.026	0.009	0.002	0	2100				1.393	0.608	0.144	0.03
300	3.383	0.657	0.182	0.031	0.011	0.002	0.001	2150				1.458	0.638	0.152	0.031
325	3.935	0.767	0.215	0.036	0.013	0.003	0.001	2200				1.525	0.669	0.159	0.033
350	4.527	0.884	0.252	0.042	0.015	0.003	0.001	2250				1.594	0.7	0.167	0.034
375		1.009	0.291	0.048	0.018	0.004	0.001	2300				1.664	0.733	0.175	0.036
400		1.143	0.333	0.054	0.02	0.004	0.001	2350				1.735	0.766	0.184	0.037
425		1.284	0.378	0.061	0.023	0.005	0.001	2400				1.808	0.8	0.192	0.039
450		1.433	0.426	0.068	0.026	0.005	0.001	2450				1.883	0.834	0.201	0.041
475		1.59	0.477	0.076	0.029	0.006	0.001	2500				1.959	0.87	0.21	0.042
500		1.755	0.532	0.084	0.032	0.007	0.002	2550				2.036	0.906	0.219	0.044
525		1.928	0.589	0.092	0.035	0.007	0.002	2600				2.115	0.943	0.228	0.046
550		2.109	0.649	0.101	0.039	0.008	0.002	2650				2.195	0.98	0.237	0.048
575		2.297	0.713	0.11	0.042	0.009	0.002	2700				2.277	1.019	0.247	0.049
600		2.493	0.779	0.12	0.046	0.01	0.002	2750				2.36	1.058	0.257	0.051
625		2.696	0.849	0.13	0.05	0.011	0.002	2800				2.445	1.098	0.267	0.053
650		2.908	0.922	0.14	0.055	0.012	0.003	2850				2.531	1.139	0.277	0.055
675		3.127	0.998	0.151	0.059	0.013	0.003	2900				2.619	1.18	0.288	0.057
700		3.353	1.077	0.162	0.064	0.014	0.003	2950				2.708	1.222	0.299	0.059
725		3.587	1.159	0.174	0.068	0.015	0.003	3000				2.798	1.265	0.309	0.061
750		3.829	1.245	0.186	0.073	0.016	0.004	3050				2.89	1.309	0.321	0.063
775		4.078	1.333	0.198	0.078	0.017	0.004	3100				2.984	1.353	0.332	0.066
800		4.335	1.425	0.211	0.084	0.018	0.004	3150				3.079	1.399	0.344	0.068
825		4.599	1.52	0.224	0.089	0.02	0.004	3200				3.175	1.445	0.355	0.07
850		4.871	1.618	0.237	0.095	0.021	0.005	3250				3.273	1.491	0.367	0.072
875			1.72	0.251	0.1	0.022	0.005	3300				3.372	1.539	0.379	0.074
900			1.824	0.265	0.106	0.024	0.005	3350				3.473	1.587	0.392	0.077
925			1.932	0.28	0.113	0.025	0.006	3400				3.575	1.636	0.404	0.079
950			2.043	0.295	0.119	0.026	0.006	3450				3.678	1.686	0.417	0.082
975			2.158	0.31	0.126	0.028	0.006	3500				3.783	1.737	0.43	0.084

Tables include losses for four 90° bends and two end fittings. Tubing runs with a larger number of bends and/or fittings shall be increased by an equivalent length of tubing to the following equation: L=1.3n where L is additional length of tubing and n is the number of additional fittings and/or bends.

Table 7-19-NG (Sheet 2 of 2)

Gastite®/FlashShield™ CSST Pressure Drop Tables
Pressure drop per foot in inches of water column (based on Natural Gas of 0.60 specific gravity)

CFH	3/8"	1/2"	3/4"	1"	1-1/4"	1-1/2"	2"	CFH	3/8"	1/2"	3/4"	1"	1-1/4"	1-1/2"	2"
3550				3.890	1.788	0.444	0.086	6900						1.838	0.335
3600				3.998	1.840	0.457	0.089	7000						1.896	0.345
3650				4.107	1.893	0.471	0.091	7100						1.954	0.356
3700				4.218	1.947	0.485	0.094	7200						2.013	0.366
3750				4.330	2.002	0.499	0.097	7300						2.074	0.376
3800				4.444	2.057	0.513	0.099	7400						2.135	0.387
3850				4.559	2.113	0.528	0.102	7500						2.197	0.398
3900				4.676	2.170	0.542	0.105	7600						2.260	0.409
3950				4.794	2.227	0.557	0.107	7700						2.324	0.420
4000				4.913	2.286	0.573	0.110	7750						2.357	0.425
4050					2.345	0.588	0.113	7800						2.389	0.431
4100					2.405	0.604	0.116	7900						2.455	0.442
4150					2.465	0.620	0.119	8000						2.522	0.454
4200					2.527	0.636	0.122	8100						2.590	0.465
4250					2.589	0.652	0.125	8200						2.659	0.477
4300					2.652	0.668	0.128	8250						2.694	0.483
4350					2.716	0.685	0.131	8300						2.729	0.489
4400					2.780	0.702	0.134	8400						2.800	0.501
4450					2.846	0.719	0.137	8500						2.871	0.513
4500					2.912	0.737	0.140	8600						2.944	0.526
4550					2.979	0.754	0.143	8700						3.018	0.538
4600					3.046	0.772	0.147	8750						3.055	0.545
4650					3.115	0.790	0.150	8800						3.093	0.551
4700					3.184	0.809	0.153	8900						3.168	0.564
4750					3.254	0.827	0.157	9000						3.245	0.577
4800					3.325	0.846	0.160	9100						3.323	0.590
4850					3.396	0.865	0.163	9200						3.401	0.603
4900					3.469	0.884	0.167	9250						3.441	0.610
4950					3.542	0.903	0.170	9300						3.481	0.617
5000					3.616	0.923	0.174	9400						3.561	0.63
5100					3.766	0.963	0.181	9500						3.643	0.644
5200					3.919	1.004	0.188	9600						3.725	0.658
5300					4.076	1.045	0.196	9700						3.809	0.672
5400					4.236	1.088	0.203	9750						3.851	0.679
5500					4.399	1.132	0.211	9800						3.893	0.686
5600					4.564	1.176	0.219	9900						3.979	0.701
5700					4.734	1.222	0.227	10000						4.065	0.715
5800					4.906	1.268	0.235	10500						4.512	0.790
5900						1.315	0.244	11000						4.984	0.869
6000						1.363	0.252	11500							0.951
6100						1.412	0.261	12000							1.038
6200						1.462	0.270	12500							1.128
6300						1.513	0.279	13000							1.222
6400						1.565	0.288	13500							1.320
6500						1.618	0.297	14000							1.422
6600						1.671	0.306	14500							1.527
6700						1.726	0.316	15000							1.637
6800						1.782	0.326								

Tables include losses for four 90° bends and two end fittings. Tubing runs with a larger number of bends and/or fittings shall be increased by an equivalent length of tubing to the following equation: L=1.3n where L is additional length of tubing and n is the number of additional fittings and/or bends.

Gastite Division
1116 Vaughn Parkway / Portland, TN 37148
800.662.0208 / www.gastite.com / gastite@gastite.com

Table 7-19-LP (Sheet 1 of 2)

Gastite®/FlashShield™ CSST Pressure Drop Tables

Pressure drop per foot in inches of water column (based on LP Gas of 1.52 specific gravity, 2516 BTUh/CFH)

kBTUh	3/8"	1/2"	3/4"	1"	1-1/4"	1-1/2"	2"	kBTUh	3/8"	1/2"	3/4"	1"	1-1/4"	1-1/2"	2"
10	0.002	0	0	0	0	0	0	1000		2.92	0.926	0.141	0.055	0.012	0.003
20	0.009	0.001	0	0	0	0	0	1050		3.208	1.026	0.155	0.061	0.013	0.003
30	0.019	0.002	0.001	0	0	0	0	1100		3.508	1.131	0.17	0.067	0.014	0.003
40	0.033	0.004	0.001	0	0	0	0	1150		3.821	1.242	0.185	0.073	0.016	0.004
50	0.051	0.006	0.002	0	0	0	0	1200		4.147	1.358	0.201	0.08	0.017	0.004
60	0.072	0.009	0.003	0.001	0	0	0	1250		4.486	1.479	0.218	0.087	0.019	0.004
70	0.096	0.012	0.004	0.001	0	0	0	1300		4.837	1.606	0.236	0.094	0.021	0.005
80	0.124	0.015	0.005	0.001	0	0	0	1350			1.738	0.254	0.102	0.022	0.005
90	0.155	0.019	0.006	0.001	0	0	0	1400			1.876	0.272	0.109	0.024	0.005
100	0.189	0.024	0.007	0.002	0	0	0	1450			2.019	0.292	0.118	0.026	0.006
110	0.226	0.029	0.009	0.002	0.001	0	0	1500			2.168	0.312	0.126	0.028	0.006
120	0.266	0.034	0.011	0.002	0.001	0	0	1550			2.322	0.332	0.135	0.03	0.007
130	0.31	0.04	0.013	0.003	0.001	0	0	1600			2.482	0.354	0.144	0.032	0.007
140	0.356	0.046	0.015	0.003	0.001	0	0	1650			2.648	0.376	0.153	0.034	0.008
150	0.406	0.052	0.017	0.003	0.001	0	0	1700			2.819	0.398	0.163	0.037	0.008
160	0.459	0.059	0.02	0.004	0.001	0	0	1750			2.995	0.421	0.173	0.039	0.009
170	0.514	0.097	0.023	0.004	0.001	0	0	1800			3.178	0.445	0.183	0.041	0.009
180	0.573	0.108	0.025	0.005	0.002	0	0	1850			3.366	0.47	0.194	0.044	0.01
190	0.635	0.12	0.028	0.005	0.002	0	0	1900			3.559	0.495	0.205	0.047	0.01
200	0.699	0.132	0.032	0.006	0.002	0	0	1950			3.758	0.521	0.216	0.049	0.011
225	0.874	0.166	0.041	0.008	0.003	0	0	2000			3.963	0.547	0.228	0.052	0.011
250	1.066	0.203	0.051	0.009	0.003	0.001	0	2050			4.174	0.574	0.24	0.055	0.012
275	1.277	0.244	0.062	0.011	0.004	0.001	0	2100			4.39	0.602	0.252	0.058	0.012
300	1.505	0.288	0.074	0.013	0.005	0.001	0	2150			4.613	0.63	0.264	0.061	0.013
325	1.751	0.336	0.088	0.016	0.005	0.001	0	2200			4.84	0.659	0.277	0.064	0.014
350	2.014	0.388	0.102	0.018	0.006	0.001	0	2250				0.689	0.29	0.067	0.014
375	2.294	0.443	0.118	0.021	0.007	0.001	0	2300				0.719	0.304	0.07	0.015
400	2.592	0.501	0.136	0.023	0.008	0.002	0	2350				0.75	0.317	0.073	0.016
425	2.907	0.563	0.154	0.026	0.009	0.002	0	2400				0.782	0.331	0.077	0.016
450	3.238	0.629	0.174	0.03	0.011	0.002	0.001	2450				0.814	0.346	0.08	0.017
475	3.587	0.698	0.194	0.033	0.012	0.002	0.001	2500				0.847	0.36	0.084	0.018
500	3.952	0.77	0.216	0.036	0.013	0.003	0.001	2550				0.88	0.375	0.087	0.018
525	4.334	0.846	0.24	0.04	0.015	0.003	0.001	2600				0.914	0.391	0.091	0.019
550	4.732	0.925	0.264	0.044	0.016	0.003	0.001	2650				0.949	0.406	0.095	0.02
575		1.007	0.29	0.048	0.018	0.004	0.001	2700				0.984	0.422	0.099	0.021
600		1.093	0.317	0.052	0.019	0.004	0.001	2750				1.02	0.438	0.103	0.021
625		1.183	0.346	0.056	0.021	0.004	0.001	2800				1.057	0.455	0.107	0.022
650		1.275	0.375	0.061	0.023	0.005	0.001	2850				1.094	0.472	0.111	0.023
675		1.371	0.406	0.065	0.024	0.005	0.001	2900				1.132	0.489	0.115	0.024
700		1.471	0.438	0.07	0.026	0.006	0.001	2950				1.171	0.506	0.119	0.025
725		1.573	0.472	0.075	0.028	0.006	0.001	3000				1.21	0.524	0.124	0.026
750		1.679	0.507	0.08	0.03	0.006	0.002	3050				1.25	0.542	0.128	0.026
775		1.789	0.543	0.086	0.032	0.007	0.002	3100				1.29	0.561	0.133	0.027
800		1.901	0.58	0.091	0.035	0.007	0.002	3150				1.331	0.58	0.137	0.028
825		2.017	0.619	0.097	0.037	0.008	0.002	3200				1.373	0.599	0.142	0.029
850		2.136	0.659	0.103	0.039	0.008	0.002	3250				1.415	0.618	0.147	0.03
875		2.259	0.7	0.109	0.042	0.009	0.002	3300				1.458	0.638	0.152	0.031
900		2.385	0.743	0.115	0.044	0.009	0.002	3350				1.501	0.658	0.157	0.032
925		2.514	0.787	0.121	0.047	0.01	0.002	3400				1.546	0.678	0.162	0.033
950		2.646	0.832	0.128	0.049	0.011	0.002	3450				1.59	0.699	0.167	0.034
975		2.781	0.878	0.134	0.052	0.011	0.003	3500				1.636	0.72	0.172	0.035

Tables include losses for four 90° bends and two end fittings. Tubing runs with a larger number of bends and/or fittings shall be increased by an equivalent length of tubing to the following equation: L=1.3n where L is additional length of tubing and n is the number of additional fittings and/or bends.

Table 7-19-LP (Sheet 1 of 2)

Gastite®/FlashShield™ CSST Pressure Drop Tables

Pressure drop per foot in inches of water column (based on LP Gas of 1.52 specific gravity, 2516 BTUh/CFH)

kBTUh	3/8"	1/2"	3/4"	1"	1-1/4"	1-1/2"	2"	kBTUh	3/8"	1/2"	3/4"	1"	1-1/4"	1-1/2"	2"
3550				1.682	0.741	0.177	0.036	6900					2.905	0.735	0.140
3600				1.728	0.763	0.183	0.037	7000					2.992	0.758	0.144
3650				1.776	0.785	0.188	0.038	7100					3.081	0.781	0.148
3700				1.824	0.807	0.194	0.039	7200					3.171	0.805	0.153
3750				1.872	0.829	0.199	0.040	7300					3.262	0.829	0.157
3800				1.921	0.852	0.205	0.041	7400					3.355	0.854	0.161
3850				1.971	0.876	0.211	0.043	7500					3.448	0.879	0.166
3900				2.022	0.899	0.217	0.044	7600					3.544	0.904	0.17
3950				2.073	0.923	0.223	0.045	7700					3.640	0.929	0.175
4000				2.124	0.947	0.229	0.046	7750					3.689	0.942	0.177
4050				2.177	0.972	0.235	0.047	7800					3.738	0.955	0.180
4100				2.229	0.996	0.241	0.048	7900					3.837	0.982	0.184
4150				2.283	1.022	0.248	0.050	8000					3.938	1.009	0.189
4200				2.337	1.047	0.254	0.051	8100					4.040	1.036	0.194
4250				2.392	1.073	0.261	0.052	8200					4.143	1.063	0.199
4300				2.447	1.099	0.267	0.053	8250					4.195	1.077	0.201
4350				2.503	1.125	0.274	0.055	8300					4.247	1.091	0.204
4400				2.560	1.152	0.281	0.056	8400					4.353	1.120	0.209
4450				2.617	1.179	0.288	0.057	8500					4.460	1.148	0.214
4500				2.675	1.207	0.295	0.058	8600					4.569	1.177	0.219
4550				2.733	1.234	0.302	0.060	8700					4.679	1.207	0.225
4600				2.792	1.262	0.309	0.061	8750					4.734	1.222	0.227
4650				2.852	1.291	0.316	0.063	8800					4.790	1.237	0.230
4700				2.912	1.319	0.323	0.064	8900					4.903	1.267	0.235
4750				2.973	1.348	0.331	0.065	9000						1.298	0.241
4800				3.035	1.378	0.338	0.067	9100						1.329	0.246
4850				3.097	1.407	0.346	0.068	9200						1.360	0.252
4900				3.160	1.437	0.353	0.070	9250						1.376	0.254
4950				3.223	1.468	0.361	0.071	9300						1.392	0.257
5000				3.287	1.498	0.369	0.072	9400						1.424	0.263
5100				3.417	1.561	0.385	0.075	9500						1.457	0.269
5200				3.549	1.624	0.401	0.079	9600						1.490	0.274
5300				3.684	1.689	0.418	0.082	9700						1.523	0.28
5400				3.821	1.755	0.435	0.085	9750						1.540	0.283
5500				3.961	1.823	0.453	0.088	9800						1.557	0.286
5600				4.103	1.892	0.470	0.091	9900						1.591	0.292
5700				4.248	1.962	0.488	0.095	10000						1.626	0.298
5800				4.395	2.033	0.507	0.098	10500						1.804	0.330
5900				4.544	2.106	0.526	0.102	11000						1.993	0.362
6000				4.696	2.180	0.545	0.105	11500						2.192	0.397
6100				4.851	2.255	0.565	0.109	12000						2.401	0.433
6200					2.332	0.585	0.112	12500						2.620	0.470
6300					2.410	0.605	0.116	13000						2.849	0.510
6400					2.489	0.626	0.120	13500						3.089	0.550
6500					2.570	0.647	0.124	14000						3.339	0.593
6600					2.652	0.668	0.128	14500						3.599	0.637
6700					2.735	0.690	0.132	15000						3.869	0.682
6800					2.819	0.712	0.136								

Tables include losses for four 90° bends and two end fittings. Tubing runs with a larger number of bends and/or fittings shall be increased by an equivalent length of tubing to the following equation: L=1.3n where L is additional length of tubing and n is the number of additional fittings and/or bends.

Gastite Division
1116 Vaughn Parkway / Portland, TN 37148
800.662.0208 / www.gastite.com / gastite@gastite.com

7.6 Iron Pipe Capacity Tables

Table 7-20															
Maximum Capacity of Steel IPS Pipe in Cubic Feet Per Hour with a Gas Pressure of 0.5 psi or Less and a Pressure Drop of 0.5 in. WC (based on a 0.60 specific gravity gas)															
Internal	Nominal Iron	Run Length (ft)													
Diameter (in.)	Pipe Size (in.)	10	20	30	40	50	60	70	80	90	100	125	150	175	200
0.364	1/4"	43	29	24	20	18	16	15	14	13	12	11	10	9	8
0.493	3/8"	95	65	52	45	40	36	33	31	29	27	24	22	20	19
0.622	1/2"	175	120	97	82	73	66	61	57	53	50	44	40	37	35
0.824	3/4"	360	250	200	170	151	138	125	118	110	103	93	84	77	72
1.049	1"	680	465	375	320	285	260	240	220	205	195	175	160	145	135
1.38	1-1/4"	1400	950	770	660	580	530	490	460	430	400	360	325	300	280
1.61	1-1/2"	2100	1460	1180	990	900	810	750	690	650	620	550	500	460	430
2.067	2"	3950	2750	2200	1900	1680	1520	1400	1300	1220	1150	1020	950	850	800
2.469	2-1/2"	6300	4350	3520	3000	2650	2400	2250	2050	1950	1850	1650	1500	1370	1280
3.068	3"	11000	7700	6250	5300	4750	4300	3900	3700	3450	3250	2950	2650	2450	2280
4.026	4"	23000	15800	12800	10900	9700	8800	8100	7500	7200	6700	6000	5500	5000	4600

Table reproduced from National Fuel Gas Code NFPA-54.

7.7 Iron Pipe Pressure Drop Tables

Table 7-21 (Sheet 1 of 4)							
Steel IPS Pressure Drop Tables Pressure drop per foot in inches of water column (based on Natural Gas of 0.60 specific gravity)							
CFH	1/2"	3/4"	1"	1-1/4"	1-1/2"	2"	2-1/2"
10	0	0	0	0	0	0	0
20	0.001	0	0	0	0	0	0
30	0.002	0.001	0	0	0	0	0
40	0.003	0.001	0	0	0	0	0
50	0.005	0.001	0	0	0	0	0
60	0.007	0.002	0.001	0	0	0	0
70	0.010	0.002	0.001	0	0	0	0
80	0.012	0.003	0.001	0	0	0	0
90	0.015	0.004	0.001	0	0	0	0
100	0.019	0.005	0.001	0	0	0	0
110	0.022	0.006	0.002	0	0	0	0
120	0.026	0.007	0.002	0.001	0	0	0
130	0.030	0.008	0.002	0.001	0	0	0
140	0.035	0.009	0.003	0.001	0	0	0
150	0.039	0.010	0.003	0.001	0	0	0
160	0.044	0.011	0.004	0.001	0	0	0
170	0.050	0.013	0.004	0.001	0	0	0
180	0.055	0.014	0.004	0.001	0.001	0	0
190	0.061	0.016	0.005	0.001	0.001	0	0
200	0.067	0.017	0.005	0.001	0.001	0	0
225	0.083	0.021	0.007	0.002	0.001	0	0
250	0.101	0.026	0.008	0.002	0.001	0	0
275	0.121	0.031	0.01	0.003	0.001	0	0
300	0.142	0.036	0.011	0.003	0.001	0	0
325	0.164	0.042	0.013	0.003	0.002	0	0
350	0.189	0.048	0.015	0.004	0.002	0.001	0
375	0.214	0.055	0.017	0.004	0.002	0.001	0
400	0.241	0.062	0.019	0.005	0.002	0.001	0
425	0.270	0.069	0.021	0.006	0.003	0.001	0
450	0.300	0.077	0.024	0.006	0.003	0.001	0
475	0.332	0.085	0.026	0.007	0.003	0.001	0
500	0.365	0.093	0.029	0.008	0.004	0.001	0
525	0.399	0.102	0.032	0.008	0.004	0.001	0
550	0.435	0.111	0.034	0.009	0.004	0.001	0.001
575	0.472	0.121	0.037	0.010	0.005	0.001	0.001
600	0.511	0.131	0.041	0.011	0.005	0.002	0.001
625	0.551	0.141	0.044	0.012	0.005	0.002	0.001
650	0.592	0.151	0.047	0.012	0.006	0.002	0.001
675	0.635	0.162	0.050	0.013	0.006	0.002	0.001
700	0.679	0.174	0.054	0.014	0.007	0.002	0.001
725	0.724	0.185	0.057	0.015	0.007	0.002	0.001
750	0.771	0.197	0.061	0.016	0.008	0.002	0.001
775	0.820	0.210	0.065	0.017	0.008	0.002	0.001
800	0.869	0.222	0.069	0.018	0.009	0.003	0.001

Tables calculated from National Fuel Gas Code NFPA-54 tables.

Gastite Division
1116 Vaughn Parkway / Portland, TN 37148
800.662.0208 / www.gastite.com / gastite@gastite.com

Table 7-21 (Sheet 2 of 4)							
Steel IPS Pressure Drop Tables Pressure drop per foot in inches of water column (based on Natural Gas of 0.60 specific gravity)							
CFH	1/2"	3/4"	1"	1-1/4"	1-1/2"	2"	2-1/2"
825	0.920	0.235	0.073	0.019	0.009	0.003	0.001
850	0.972	0.249	0.077	0.020	0.010	0.003	0.001
875	1.026	0.262	0.081	0.022	0.010	0.003	0.001
900	1.080	0.276	0.086	0.023	0.011	0.003	0.001
925	1.137	0.291	0.090	0.024	0.011	0.003	0.001
950	1.194	0.305	0.095	0.025	0.012	0.004	0.001
975	1.253	0.32	0.099	0.026	0.012	0.004	0.002
1000	1.313	0.336	0.104	0.028	0.013	0.004	0.002
1050	1.437	0.367	0.114	0.030	0.014	0.004	0.002
1100	1.566	0.400	0.124	0.033	0.016	0.005	0.002
1150	1.700	0.435	0.135	0.036	0.017	0.005	0.002
1200	1.839	0.47	0.146	0.039	0.018	0.005	0.002
1250	1.983	0.507	0.157	0.042	0.020	0.006	0.002
1300	2.132	0.545	0.169	0.045	0.021	0.006	0.003
1350	2.286	0.585	0.181	0.048	0.023	0.007	0.003
1400	2.445	0.625	0.194	0.051	0.024	0.007	0.003
1450	2.609	0.667	0.207	0.055	0.026	0.008	0.003
1500	2.778	0.71	0.22	0.058	0.028	0.008	0.003
1550	2.951	0.755	0.234	0.062	0.029	0.009	0.004
1600	3.13	0.8	0.248	0.066	0.031	0.009	0.004
1650	3.313	0.847	0.263	0.070	0.033	0.010	0.004
1700	3.501	0.895	0.278	0.073	0.035	0.010	0.004
1750	3.693	0.945	0.293	0.078	0.037	0.011	0.005
1800	3.891	0.995	0.309	0.082	0.039	0.012	0.005
1850	4.093	1.047	0.325	0.086	0.041	0.012	0.005
1900	4.300	1.100	0.341	0.090	0.043	0.013	0.005
1950	4.511	1.154	0.358	0.095	0.045	0.013	0.006
2000	4.727	1.209	0.375	0.099	0.047	0.014	0.006
2050	4.948	1.266	0.393	0.104	0.049	0.015	0.006
2100	5.173	1.323	0.41	0.109	0.051	0.015	0.006
2150	5.403	1.382	0.429	0.113	0.054	0.016	0.007
2200	5.638	1.442	0.447	0.118	0.056	0.017	0.007
2250	5.877	1.503	0.466	0.123	0.058	0.017	0.007
2300	6.121	1.565	0.486	0.128	0.061	0.018	0.008
2350	6.369	1.629	0.505	0.134	0.063	0.019	0.008
2400	6.622	1.694	0.525	0.139	0.066	0.02	0.008
2450	6.879	1.759	0.546	0.144	0.068	0.02	0.009
2500	7.141	1.826	0.567	0.15	0.071	0.021	0.009
2550	7.407	1.894	0.588	0.155	0.074	0.022	0.009
2600	7.677	1.964	0.609	0.161	0.076	0.023	0.010
2650	7.953	2.034	0.631	0.167	0.079	0.024	0.010
2700	8.232	2.105	0.653	0.173	0.082	0.024	0.010
2750	8.516	2.178	0.676	0.179	0.085	0.025	0.011
2800	8.805	2.252	0.699	0.185	0.088	0.026	0.011

Tables calculated from National Fuel Gas Code NFPA-54 tables.

Table 7-21 (Sheet 3 of 4)							
Steel IPS Pressure Drop Tables Pressure drop per foot in inches of water column (based on Natural Gas of 0.60 specific gravity)							
CFH	1/2"	3/4"	1"	1-1/4"	1-1/2"	2"	2-1/2"
2850	9.097	2.327	0.722	0.191	0.09	0.027	0.011
2900	9.395	2.403	0.745	0.197	0.093	0.028	0.012
2950	9.696	2.48	0.769	0.204	0.096	0.029	0.012
3000	10.002	2.558	0.794	0.21	0.099	0.030	0.013
3050	10.312	2.638	0.818	0.216	0.103	0.031	0.013
3100	10.627	2.718	0.843	0.223	0.106	0.031	0.013
3150	10.946	2.800	0.868	0.230	0.109	0.032	0.014
3200	11.269	2.882	0.894	0.237	0.112	0.033	0.014
3250	11.597	2.966	0.92	0.243	0.115	0.034	0.015
3300	11.929	3.051	0.946	0.250	0.119	0.035	0.015
3350	12.265	3.137	0.973	0.257	0.122	0.036	0.015
3400	12.606	3.224	1.000	0.265	0.125	0.037	0.016
3450	12.951	3.312	1.028	0.272	0.129	0.038	0.016
3500	13.300	3.402	1.055	0.279	0.132	0.039	0.017
3550	13.653	3.492	1.083	0.287	0.136	0.040	0.017
3600		3.583	1.112	0.294	0.139	0.041	0.018
3650		3.676	1.140	0.302	0.143	0.043	0.018
3700		3.770	1.169	0.309	0.147	0.044	0.018
3750		3.864	1.199	0.317	0.15	0.045	0.019
3800		3.960	1.228	0.325	0.154	0.046	0.019
3850		4.057	1.258	0.333	0.158	0.047	0.020
3900		4.155	1.289	0.341	0.161	0.048	0.020
3950		4.254	1.320	0.349	0.165	0.049	0.021
4000		4.354	1.351	0.357	0.169	0.050	0.021
4050		4.455	1.382	0.366	0.173	0.052	0.022
4100		4.557	1.414	0.374	0.177	0.053	0.022
4150		4.660	1.446	0.382	0.181	0.054	0.023
4200		4.765	1.478	0.391	0.185	0.055	0.023
4250		4.870	1.511	0.400	0.189	0.056	0.024
4300		4.976	1.544	0.408	0.193	0.058	0.024
4350		5.084	1.577	0.417	0.198	0.059	0.025
4400		5.193	1.611	0.426	0.202	0.060	0.025
4450		5.302	1.645	0.435	0.206	0.061	0.026
4500		5.413	1.679	0.444	0.21	0.063	0.026
4550		5.524	1.714	0.453	0.215	0.064	0.027
4600		5.637	1.749	0.463	0.219	0.065	0.028
4650		5.751	1.784	0.472	0.224	0.067	0.028
4700		5.866	1.82	0.481	0.228	0.068	0.029
4750		5.982	1.856	0.491	0.233	0.069	0.029
4800		6.099	1.892	0.501	0.237	0.071	0.030
4850		6.216	1.928	0.510	0.242	0.072	0.030
4900		6.335	1.965	0.520	0.246	0.073	0.031

Tables calculated from National Fuel Gas Code NFPA-54 tables.

Gastite Division
1116 Vaughn Parkway / Portland, TN 37148
800.662.0208 / www.gastite.com / gastite@gastite.com

Table 7-21 (Sheet 4 of 4)							
Steel IPS Pressure Drop Tables Pressure drop per foot in inches of water column (based on Natural Gas of 0.60 specific gravity)							
CFH	1/2"	3/4"	1"	1-1/4"	1-1/2"	2"	2-1/2"
4950		6.455	2.003	0.53	0.251	0.075	0.032
5000		6.577	2.04	0.54	0.256	0.076	0.032
5100		6.822	2.116	0.56	0.265	0.079	0.033
5200		7.071	2.194	0.58	0.275	0.082	0.035
5300		7.324	2.272	0.601	0.285	0.085	0.036
5400		7.582	2.352	0.622	0.295	0.088	0.037
5500		7.843	2.433	0.644	0.305	0.091	0.038
5600		8.109	2.516	0.666	0.315	0.094	0.04
5700		8.379	2.599	0.688	0.326	0.097	0.041
5800		8.652	2.684	0.71	0.336	0.1	0.042
5900		8.93	2.77	0.733	0.347	0.103	0.044
6000		9.212	2.858	0.756	0.358	0.107	0.045
6100		9.498	2.946	0.78	0.369	0.11	0.046
6200		9.788	3.036	0.803	0.38	0.113	0.048
6300		10.081	3.127	0.827	0.392	0.117	0.049
6400		10.379	3.22	0.852	0.403	0.12	0.051
6500		10.681	3.313	0.877	0.415	0.124	0.052
6600		10.987	3.408	0.902	0.427	0.127	0.054
6700		11.296	3.504	0.927	0.439	0.131	0.055
6800		11.61	3.602	0.953	0.451	0.134	0.057
6900		11.927	3.7	0.979	0.464	0.138	0.058
7000		12.249	3.8	1.005	0.476	0.142	0.06
7100		12.574	3.901	1.032	0.489	0.146	0.061
7200		12.904	4.003	1.059	0.502	0.149	0.063
7300		13.237	4.106	1.086	0.515	0.153	0.065
7400		13.574	4.211	1.114	0.528	0.157	0.066
7500			4.317	1.142	0.541	0.161	0.068
7750			4.586	1.213	0.575	0.171	0.072
8000			4.864	1.287	0.609	0.181	0.077
8250			5.148	1.362	0.645	0.192	0.081
8500			5.44	1.439	0.682	0.203	0.086
8750			5.74	1.519	0.719	0.214	0.09
9000			6.046	1.6	0.758	0.226	0.095
9250			6.361	1.683	0.797	0.237	0.1
9500			6.682	1.768	0.837	0.249	0.105
9750			7.011	1.855	0.878	0.262	0.111
10000			7.346	1.944	0.921	0.274	0.116
11000			8.762	2.318	1.098	0.327	0.138
12000			10.291	2.723	1.289	0.384	0.162
13000			11.931	3.157	1.495	0.445	0.188
14000			13.683	3.62	1.715	0.511	0.216
15000				4.113	1.948	0.58	0.245

Tables calculated from National Fuel Gas Code NFPA-54 tables.

7.8 Reference Data

Table 7-22					
Pressure Conversion Factors			Fuel Gas Information		
1/4 psi =	6.921 in. w.c. =	(approx. 7" w.c.)		Natural Gas	Propane
1/2 psi =	13.842 in. w.c. =	(approx. 14" w.c.)	BTU per Cubic Foot =	1000	2516
1 psi =	27.684 in. w.c. =	(approx. 28" w.c.)	Specific Gravity =	0.60	1.52
2 psi =	55.368 in. w.c. =	(approx. 56" w.c.)	Note: "Pressure Drop Curves for Gastite®/FlashShield CSST" are expressed in terms of Cubic Feet per Hour (CFH). To determine the CFH for Natural Gas, divide the BTU load by 1000. To determine the CFH for Propane, divide the BTU load by 2516.		
5 psi =	138.42 in. w.c. =	(approx. 140" w.c.)			

Table 7-23

Specific Gravity Factor for Natural Gas

Gas piping systems that are to be supplied with gas of a specific gravity other than 0.60 shall apply a specific gravity factor. The conversion is accomplished by multiplying the capacities given in the tables, charts and graphs by the appropriate multiplier from the table below. In case the exact specific gravity does not appear in the table, choose the next higher value shown. Check with the local gas utility or supplier for the correct specific gravity.

Options:

1. Using Table A-5 the flow capacity of 1/2" CSST at 50 ft, for natural gas with a specific gravity of 0.60 is 266 CFH. At a specific gravity of 0.65 the resultant value in the table will be 255 CFH (266 x 0.96).

or

2. A furnace rated at 80,000 BTUH natural gas with a specific gravity of 0.60 will be rated at 76,800 BTUH natural gas with a specific gravity of 0.65 (80,000/0.96).

Specific Gravity	Multiplier	Specific Gravity	Multiplier
0.35	1.31	1.00	0.78
0.40	1.23	1.10	0.74
0.45	1.16	1.20	0.71
0.50	1.10	1.30	0.68
0.55	1.04	1.40	0.66
0.60	1.00	1.50	0.63
0.65	0.96	1.60	0.61
0.70	0.93	1.70	0.59
0.75	0.90	1.80	0.58
0.80	0.87	1.90	0.56
0.85	0.84	2.00	0.55
0.90	0.82	2.10	0.54

Gastite Division
1116 Vaughn Parkway / Portland, TN 37148
800.662.0208 / www.gastite.com / gastite@gastite.com

Section 8.0 Definitions

APPLIANCE (EQUIPMENT) – Any device which utilizes gas as a fuel or raw material to produce light, heat, power, refrigeration or air conditioning.

APPROVED – Acceptable to the authority having jurisdiction.

AUTHORITY HAVING JURISDICTION – The organization, office or individual responsible for "approving" equipment, an installation or procedure.

BONDING (BONDED) – The permanent joining of metallic parts to form an electrically conductive path that ensures electrical continuity and the capacity to conduct safely any current likely to be imposed. As per the National Electrical Code.

CAPACITY, FLOW – As used in this standard, the amount of a specified gas that will flow through a specific length and configuration of tubing, a manifold, fitting or other component at a specified pressure drop in a fixed period of time.

CONCEALED GAS TUBING – Gas tubing, which, when in place in a finished building, would require removal of permanent construction to gain access to the piping.

CONNECTOR, GAS APPLIANCE – A factory-fabricated assembly of gas conduit and related fittings designed to convey gaseous fuel, and used for making connections between a gas supply piping outlet and the gas to an appliance. It is equipped at each end for attachment to standard taper pipe threads.

DIRECT BONDING – Bonding, as above, where the electrical connection is made using a clamp and wire at the piping connected directly to the electrical panel. Refer to Section 4.10 Electrical Bounding of Gastite®/FlashShield™ CSST.

EFFECTIVE GROUND-FAULT CURRENT PATH – An intentionally constructed, permanent, low impedance electrically conductive path designed and intended to carry under ground fault conditions from the point of a ground fault on a wiring system to the electrical supply source.

EQUIVALENT HYDRAULIC DIAMETER (EHD) – A theoretical size, which reflects the hydraulic performance of the tubing. It is not true physical measurement.

EXPOSED GAS TUBING – Gas tubing which will be in view in the finished structure.

FUEL GAS – A commonly distributed gas used for fuel such as natural gas, manufactured gas, undiluted liquefied petroleum gas (vapor phase only), liquefied petroleum gas-air mixtures of these gases (includes propane and butane).

GAS UTILIZATION EQUIPMENT – Any device that utilizes gas as a fuel or raw material or both.

INCHES OF WATER COLUMN ("WC) – Method of pressure measured in inches of water column by a manometer or pressure gauge. Commonly used in the gas industry when the pressure is less than 1 PSI.

LEAK TEST SOLUTION – A solution of commercial leak-testing fluids may be used. The use of soap buds or household detergents and water is not considered a satisfactory leak-test fluid for a bubble test, because of a lack of sensitivity due to masking by foam. The fluid should be capable of being applied free of bubbles so that a bubble appears only at a leak. The fluid selected should not bubble except in response to a leak.

LISTED – Equipment or materials including a list published by an organization acceptable to the authority having jurisdiction and concerned with product evaluation that maintains periodic inspection of production of listed equipment or materials and whose listing states either that the equipment or materials meets appropriate standards or has been tested and found suitable for use in a specified manner.

LOCKUP PRESSURE, REGULATOR – The system pressure, immediately downstream of the regulator, at which the regulator valve will completely close (leak tight) under no-flow conditions to prevent the downstream pressure from exceeding a predetermined level.

MAXIMUM ACTUAL OPERATING PRESSURE – The maximum pressure existing in a piping system during a normal annual operating cycle.

OVER-PRESSURE PROTECTION DEVICE (OPD) – System component that is intended to protect all downstream components from high pressures in the event of a system failure. OPDs are required in gas systems using more than 2psi line pressure.

PIPING SYSTEM – As used in this standard, an assembly of corrugated stainless steel tubing and tubing connection fittings, intended for field assembly and installation in residential or commercial buildings to distribute fuel gas to gas utilization equipment within the building. The piping system may also include a gas pressure regulator(s), a shutoff valve(s), tube shielding devices, distribution manifold(s), and other approved devices or components.

PLENUM – A plenum is an enclosed portion of the building structure that is designed to allow air movement, and thereby serve as part of an air distribution system.

PRESSURE DROP – The loss in static pressure of flowing fuel gas due to friction or other flow resistance in tubing, fittings, valves, regulators, or other devices in the piping system.

QUALIFIED INSTALLER – Any individual, firm, corporation or company which either in person or through a representative is engaged in and is responsible for the installation or replacement of building gas piping systems, who is experienced in such work, familiar with all precautions required, and has complied with all the requirements of the authority having jurisdiction.

QUICK-DISCONNECT DEVICE – A hand-operated device which provides a means for connecting and disconnecting an appliance or an appliance connector to a gas supply, and which is equipped with an automatic means to shut off the gas supply when the device is disconnected.

REGULATOR, PRESSURE – A device placed in a gas line for reducing, controlling and maintaining the pressure in that portion of the piping system downstream of the device.

SHIELDING DEVICE – A component of the piping system used to protect the installed corrugated tubing from accidental puncture by nails, screws or similar hardware at concealed tubing support points.

STRIKER PLATE – A special type of shielding device used when concealed tubing is run through wall studs, floor and ceiling joists or other structural members where tubing movement is restricted.

VALVE, SHUTOFF – A device used in piping to control the gas supply to any section of the piping system or to an appliance.

Gastite Division
1116 Vaughn Parkway / Portland, TN 37148
800.662.0208 / www.gastite.com / gastite@gastite.com

Section 9.0 Dimensional and Technical Reference Data

9.1 Gastite® Dimensional and Technical Reference Data

Table 9-1							
Gastite Corrugated Stainless Steel Tubing – Dimensional Values (Fig. 9-1)							
Gastite® Part Number	S93-6A	S93-8A	S93-11B	S93-16A	S93-20A	S93-24A	S93-32A
Size	(3/8")	(1/2")	(3/4")	(1")	(1-1/4")	(1-1/2")	(2")
Equivalent Hydraulic Diameter (EHD)	13	18	23	31	37	47	60
Nominal Diameter	0.375	0.5	0.75	1	1.25	1.5	2
Inside Nominal Diameter	0.39	0.57	0.75	1.04	1.25	1.5	2
Outside Nominal Diameter (w/o jacket)	0.51	0.71	0.93	1.25	1.5	1.74	2.32
Outside Nominal Diameter (w/jacket)	0.56	0.76	0.98	1.3	1.55	1.79	2.4
Convolution Height	0.045	0.06	0.077	0.106	0.112	0.123	0.16
Pitch (Convolutions Per Foot)	75	65	50	48	45	45	42
Length Of Reels	125-500	125-500	125-500	150-500	150-500	150-300	150-300
Weight of Tubing (lbs./ft.)	0.069	0.094	0.123	0.193	0.254	0.36	0.572
Wall Thickness	0.01	0.01	0.01	0.01	0.011	0.012	0.012

Table 9-2							
Gastite "XR" Series Straight Fitting – Dimensional Values							
Gastite Part Number	XRFTG-6	XRFTG-8	XRFTG-11	XRFTG-16	XRFTG-20	XRFTG-24	XRFTG-32
Size	(3/8")	(1/2")	(3/4")	(1")	(1-1/4")	(1-1/2")	(2")
Pipe Thread	1/2"	1/2"	3/4"	1"	1 1/4"	1-1/2"	2"
Hex Size – Adapter/Nut	.875 / 1.00	1.125 / 1.250	1.375 / 1.500	1.625 / 1.750	2.000 / 2.125	2.500 / 2.750	3.062/3.375
Weight (Lbs.)	0.27	0.36	0.52	0.64	1.2	2.6	4
Overall Length	1.925	2	2.125	2.375	2.75	2.75	3.5

Gastite "XR" Series Termination Fitting – Dimensional Values							
Gastite Part Number	XRTRM-6	XRTRM-8	XRTRM-11	XRTRM-16	XRTRM-20	XRTRM-24	XRTRM-32
Size	(3/8")	(1/2")	(3/4")	(1")	(1-1/4")	(1-1/2")	(2")
Pipe Thread	1/2"	1/2"	3/4"	1"	1-1/4"	1-1/2"	2"
Flange Thread	1/2"	3/4"	1"	1-1/4"	1-1/2"	2"	2-1/2"
Flange Outside Diameter	2-1/2"	2-1/2"	3"	3"	4"	5-5/8"	N/A
Mounting Hole Pattern Diameter	3-1/2"	3-1/2"	4'	4'	3"	4-1/4"	N/A

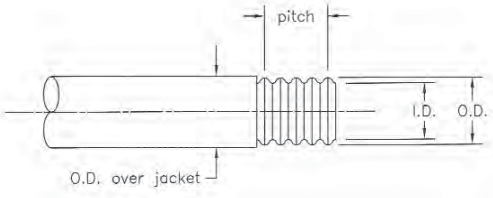

Fig. 9-1

Table 9-4
Component Description (Fig. 9-2, 9-3, 9-4)
1. Corrugated Tubing – 304 Stainless Steel ASTM A240
2. Jacketing – Flame Retarding Polyethylene ASTM E84; 25/20
3. Adapter – CA360 Brass
4. Split Bushing – CA360 Brass
5. Nut – CA360 Brass
6. Termination Nut – CA360 Brass
7. Square Flange – Square with Zinc Coating

Fig. 9-2

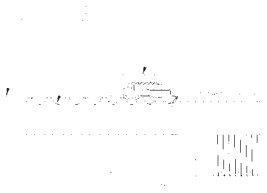

Fig. 9-3

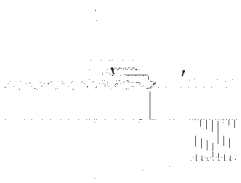

Fig. 9-4

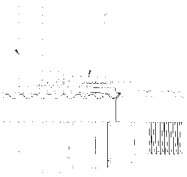

9.2 FlashShield™ Dimensional and Technical Reference Data

Table 9-5				
FlashShield™ Corrugated Stainless Steel Tubing – Dimensional Values (Fig. 9-1)				
FlashShield™ Part Number	FS-8	FS-11	FS-16	FS-20
Size	(1/2")	(3/4")	(1")	(1-1/4")
Equivalent Hydraulic Diameter (EHD)	18	23	31	37
Nominal Diameter	0.5	0.75	1	1.25
Inside Nominal Diameter	0.57	0.75	1.04	1.25
Outside Nominal Diameter (w/o jacket)	0.71	0.93	1.25	1.50
Outside Nominal Diameter (w/jacket)	0.82	1.02	1.36	1.61
Convolution Height	0.06	0.077	0.106	0.112
Pitch (Convolutions Per Foot)	65	50	48	45
Length of Reels	125-500	125-500	125-500	150-500
Weight of Tubing (lbs./ft.- with jacket)	0.166	0.209	0.307	0.386
Wall Thickness	0.01	0.01	0.01	0.011

Table 9-6				
FlashShield™ Series Straight Fitting – Dimensional Values				
FlashShield™ Part Number	FSFTG-8	FSFTG-11	FSFTG-16	FSFTG-20
Size	(1/2")	(3/4")	(1")	(1-1/4")
Pipe Thread (NPT)	1/2"	3/4"	1"	1-1/4"
Hex Size – Adapter	1-1/8	1-3/8	1-3/4	2-1/16
Hex Size – Nut	1-1/4	1-9/16	1-15/16	2-3/16
Weight (lbs.)	0.266	0.409	0.608	0.96
Overall Length	1.7	1.85	1.88	2.2

Table 9-7				
FlashShield™ Series Termination Fitting – Dimensional Values				
FlashShield™ Part Number	FSTRM-8	FSTRM-11	FSTRM-16	FSTRM-20
Size	(1/2")	(3/4")	(1")	(1-1/4")
Pipe Thread (NPT)	1/2"	3/4"	1"	1-1/4"
Flange Thread (NPT)	3/4"	1"	1-1/4"	1-1/2"
Square Flange Outside Dimension	2-5/8"	2-5/8"	2-5/8"	3-1/4"
Mounting Hole Pattern Diameter	2-3/4"	2-3/4"	2-3/4"	3-1/4"

Temperature Limits - Jacket

Melting Point: 205°F
Minimum Operating Temp: -35°F
Maximum Operating Temp: 160°F

Jacket - Tri-layer polymer and metal with flame retardant meets the testing requirements of ASTM E84 25/50

Gastite Division
1116 Vaughn Parkway / Portland, TN 37148
800.662.0208 / www.gastite.com / gastite@gastite.com

Gastite® Specification Sheet

All System Components are CSA Approved

System Performance

Pressure Rating

Tubing:

Maximum Approved Operating Pressure		5 psi
Recommended Test Pressure		50 psi
Tubing Minimum Burst Pressure		1500 psi
Maximum Test Pressure	3/8" - 1":	250 psi
	1-1/4":	150 psi
	1-1/2":	140 psi
	2":	65 psi

Temperature Limits

Tubing:

Melting Point	2400°F
Minimum Operating Temp (w/o regulator):	-40°F (-100°F)
Maximum Operating Temp (w/o regulator):	205°F (400°F)

Jacket:

Melting Point:	350°F
Minimum Operating Temp:	-100°F
Maximum Operating Temp:	200°F

System Materials

Corrugated Stainless Steel Tubing

Tubing:	ASTM A240 Type 304 Stainless Steel
Jacket:	Polyethylene with Flame Retardant, ASTM E84 Compliant 25/50

Fitting Material

Mechanical Joint Fitting:

Adapter:	CA360 Brass
Nut:	CA360 Brass
Split Bushings:	CA360 Brass

Termination Fitting:

Adapter:	CA360 Brass
Nut:	CA360 Brass
Split Bushing:	CA360 Brass
Flange:	Square Flange - Steel with Zinc Coating

Protection Devices

Striker Plates:	16 Gage AISI 1050 Carbon Steel Hardened to Rc 45 with Black Oil and Phosphate Coating
Floppy Conduit:	Strip Wound Interlocking Steel (Heavy Wall)

Accessories

Valves:	Meet requirements of ANSI/ASME B16.33 (125 psi) or AGA 3-88 (5 psi)
Regulators:	Gas line pressure regulator std. ANSI/CGA Z21.80, CGA-6.22 with vent limiting device
Manifolds Cast:	ASTM A47 32510 Malleable Iron
	Welded: Welded IPS Schedule 40

Gastite Division
1116 Vaughn Parkway / Portland, TN 37148
800.662.0208 / www.gastite.com / gastite@gastite.com

FlashShield™ Specification Sheet

All System Components are CSA Approved

System Performance

Pressure Rating

Tubing:

Maximum Approved Operating Pressure		5 psi
Recommended Test Pressure		50 psi
Tubing Minimum Burst Pressure		1500 psi
Maximum Test Pressure	1/2" - 1":	250 psi
	1-1/4":	150 psi

Temperature Limits

Tubing:

Melting Point	2400°F
Minimum Operating Temp (w/o regulator):	-40°F (-100°F)
Maximum Operating Temp (w/o regulator):	205°F (400°F)

Jacket:

Melting Point:	205°F
Minimum Operating Temp:	-35°F
Maximum Operating Temp:	160°F

System Materials

Corrugated Stainless Steel Tubing

Tubing:	ASTM A240 Type 304 Stainless Steel
Jacket:	Flame & Smoke Retardant meets testing requirements of ASTM E84 25/50

Fitting Material

Mechanical Joint Fitting:	
Adapter:	CA360 Brass
Nut:	CA360 Brass
Split Bushings:	CA360 Brass

Protection Devices

Striker Plates:	16 Gage AISI 1050 Carbon Steel Hardened to Rc 45 with Black Oil and Phosphate Coating
Floppy Conduit:	Strip Wound Interlocking Steel (Heavy Wall)

Accessories

Valves:	Meet requirements of ANSI/ASME B16.33 (125 psi) or AGA 3-88 (5 psi)
Regulators:	Gas line pressure regulator std. ANSI/CGA Z21.80, CGA-6.22 with vent limiting device
Manifolds Cast:	ASTM A47 32510 Malleable Iron
	Welded: Welded IPS Schedule 40

Gastite Division
1116 Vaughn Parkway / Portland, TN 37148
800.662.0208 / www.gastite.com / gastite@gastite.com

SECTION 10.0 WARRANTY

WARRANTY
GASTITE® FLEXIBLE GAS PIPING SYSTEM
FLASHSHIELD™ FLEXIBLE GAS PIPING SYSTEM

Gastite Division warrants its products to be free from any defect of workmanship and material. Should any such defects be discovered, the questionable product must be returned to Gastite Division. If, upon inspection, the part proves to be defective, Gastite Division will furnish a replacement, or, at its option, repair the part.

This warranty shall not apply to any part or parts of the Gastite®/FlashShield™ Flexible Gas Piping System product if it has been installed, altered, repaired or misused, through negligence or otherwise, in a way that in the option of Gastite Division affects the reliability of, or detracts from, the performance of the product. Nor does this warranty cover replacements or repairs necessitated by loss or damage resulting from any cause beyond the control of Gastite Division, including but not limited to, acts of God, acts of government, floods and fires.

The obligation of Gastite Division under this warranty is limited, at Gastite Division's discretion, to 1) making a replacement part available, 2) the repair of the defective part, or 3) refund of purchase price. This does not include the furnishing of any labor involved or connected therewith, such as that required to diagnose trouble or to remove or install any such product, nor does it include responsibility for any transportation expenses or any damages or losses incurred in transportation in connection therewith.

THE FOREGOING IS IN LIEU OF ANY OTHER WARRANTIES EXPRESSED, IMPLIED OR STATUTORY, INCLUDING, WITHOUT LIMITATION, THE IMPLIED WARRANTY OF MERCHANTABILITY, AND GASTITE DIVISION NEITHER ASSUMES NOR AUTHORIZES ANY PERSON TO ASSUME FOR GASTITE DIVISION ANY OTHER OBLIGATION OR LIABILITY IN CONNECTION WITH THE SALE OF ITS PRODUCTS.

INSTALLATION REQUIREMENTS

1. Installation must be performed strictly in accordance with local plumbing and/or building codes, and in accordance with Gastite®/FlashShield™ Design and Installation Guide.

2. Installation must be performed by an installer who has successfully completed a training program recognized by Gastite Division and has been issued a Certification Card.

3. Pressure testing must be performed during rough construction with piping system exposed.

4. Gastite Division assumes no responsibility for product or labor for any system which has been improperly installed.

Frequently Asked Questions

1. How do I correctly bond Gastite? . . . . . .(page 73)

2. What training do I need to install Gastite®/FlashShield™? . . . . . .(page 1 paragraph 2)

3. Can I tap into an existing black pipe system? . . . . . .(page 5 bullet b)

4. Can I use Gastite®/FlashShield™ with natural gas / propane gas? . . . . . .(page 5 bullet a)

5. Are Gastite®/FlashShield™ fittings approved for concealed use? . . . . . .(page 56 section 4.3.4)

6. Can I use Gastite®/FlashShield™ outdoors? . . . . . .(page 57 section 4.3.6)

7. Can Gastite®/FlashShield™ be run on a roof-top? . . . . . .(page 63 bullet a)

8. If I cut the jacket too far back will it prevent sealing? . . . . . .(page 5 bullet c)

9. What is the maximum pressure I can use with Gastite®/FlashShield™? . . . . . .(page 103)

10. What's the maximum test pressure for Gastite®/FlashShield™? . . . . . .(page 103)

11. Can Gastite®/FlashShield™ be run within a plenum? . . . . . .(page 57 section 4.3.7)

12. What does EHD mean? . . . . . .(page 99)

13. How tight a bend radius can I make? . . . . . .(page 49 table 4-1)

14. Can I use pipe dope in the Gastite®/FlashShield™ fitting? . . . . . .(bottom of page 50)

15. What size clearance holes do I drill? . . . . . .(page 55 table 4-4)

16. How do I run Gastite through a firewall? . . . . . .(page 57 section 4.3.7)

17. Can I use non-Gastite striker plates? . . . . . .(page 58 section 4.4.1)

18. Can I connect Gastite®/FlashShield™ directly to the meter? . . . . . .(page 60 section 4.5)

19. Can I connect Gastite®/FlashShield™ directly to an appliance? . . . . . .(page 61 section 4.6)

20. Can I conceal a manifold? . . . . . .(page 67 paragraph 2)

21. Can I bury Gastite®/FlashShield™? . . . . . .(page 72 bullet a)

22. Is Gastite®/FlashShield™ allowed under a slab? . . . . . .(page 72 bullet a)

23. Can I conceal a regulator? . . . . . .(page 70 bullet a)

24. What is a vent limiter? . . . . . .(page 70 bullet d)

25. Can I install a regulator outdoors? . . . . . .(bottom page 70)

26. Can I install a regulator upside-down / sideways? . . . . . .(page 70 bullet c)

Gastite Division
1116 Vaughn Parkway / Portland, TN 37148
800.662.0208 / www.gastite.com / gastite@gastite.com

Notes

Gastite Division
1116 Vaughn Parkway / Portland, TN 37148
800.662.0208 / www.gastite.com / gastite@gastite.com

Notes

Gastite Division
1116 Vaughn Parkway / Portland, TN 37148
800.662.0208 / www.gastite.com / gastite@gastite.com

Gastite®/FlashShield™ Flexible Gas Piping Training Program Test

Administered only after completion of authorized Gastite®/FlashShield™ training course.

Circle the appropriate answer.

1. Which requirement takes precedence for the installation of fuel gas piping systems?
   a. The more restrictive requirement
   b. Gastite® Design Guide
   c. Local plumbing, mechanical or gas code

2. Gastite®/FlashShield™ CSST can be installed in combination with all approved fuel gas-piping materials such as black pipe and copper using approved threaded couplings at the interface.

   True False

3. Gastite®/FlashShield™ CSST is approved for direct burial in soil or concrete without sleeving.

   True False

4. The jacket lock feature is required when making FlashShield fitting connections?

   True False

5. In addition to Gastite®/FlashShield™ fittings, fittings from other CSST manufacturers' can be used on the Gastite®/FlashShield™ CSST.

   True False

6. Gastite® XR2 fittings can be used on FlashShield™ tubing?

   True False

7. Strike protection is required whenever the tubing is: concealed and constrained and within 3 inches of a potential threat.

   True False

8. For most installations, tubing connected to a termination fitting assembly should be protected by strip wound steel conduit for the first 6 inches from the connection.

   True False

9. For elevated pressure systems, it is necessary to isolate or remove the line pressure regulator during pressure tests.

   True False

10. Other metallic systems may be used as a means of support for Gastite® CSST.

    True False

11. Gastite®/FlashShield™ CSST can be used for either natural gas or propane systems.

    True False

12. Electrical bonding of Gastite® CSST must be performed by _____.
    a. A qualified electrician
    b. A certified Gastite installer
    c. A utility.
    d. Any of the above depending on local jurisdiction approval.

13. Gastite®/FlashShield™ CSST must be terminated to a fixed point for _____.
    a. Moveable appliance connections
    b. High pressure systems
    c. Pressure testing the gas piping system

14. The line pressure regulator is only required for elevated pressures exceeding 1/2 psi (14 inches water column).

    True False

15. Installation clearance holes for routing flexible gas piping are to be at least _____.
    a. 2 inches in diameter
    b. 1/2 inch larger than the tubing O.D.
    c. As large as building code permits

16. In the absence of local requirements, the system should be pressure tested to 1-1/2 times the maximum working pressure but not less than 3 psi.

    True False

Gastite Division
1116 Vaughn Parkway / Portland, TN 37148
800.662.0208 / www.gastite.com / gastite@gastite.com

17. When using the "Longest Run" method for sizing a Gastite®/FlashShield™ CSST system, the tubing length considered is ____.

    a. The maximum distance from the meter to the furthest appliance location
    b. The actual length of each individual run only
    c. Not really a factor because 1/2" piping has always done the job

18. Only listed Gastite®/FlashShield™ Striker Plates are to be used to protect Gastite®/FlashShield CSST when passing through structural members.

    True False

19. FlashShield™ CSST can be installed within a Chase.

    True False

20. Pressure testing of the installed Gastite®/FlashShield™ system in new construction must be performed during rough construction of the facility before interior walls are finished.

    True False

Please Print Clearly Or You Will Not Receive Your Permanent Certificate

Date:

Name:

Signature:

Title:

Company:

Address:

City:

State: Zip Code:

E-Mail:

Personal data will not be shared outside of Gastite® and will be used to update you on product updates and changes.

Instructor:

Signature:

Certificate # 10GF015001

The following person has successfully completed the Gastite Certification Training Program and is hereby recognized as a

Qualified Installer

Name | Instructor

Company | Issue Date

Certificate No. | Expiration Date

Authorized to purchase and install Gastite & FlashShield™ Flexible Gas Piping

1-800-662-0208 / www.Gastite.com
10GF015001

Gastite Division
1116 Vaughn Parkway
Portland, TN 37148
Ph: 413.739.5631 • Fax: 413.739.7325
Toll Free: 800.662.0208
E-mail: gastite@gastite.com
Web: www.gastite.com